Electricity Questions Part 2

35 Questions

Name: _____

Class: _____

Date: _____

Time:

Marks:

Comments:

Q1.

(a) The diagram shows the traces produced on an oscilloscope when it is connected across different electricity supplies.

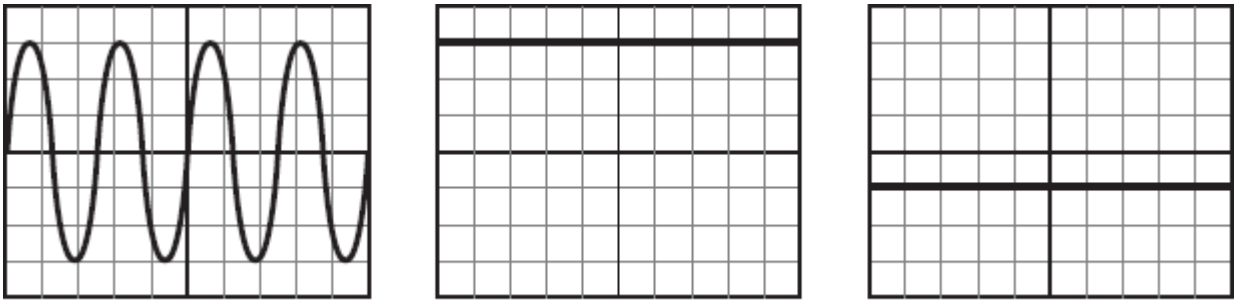

A B C

Which of the traces could have been produced by the mains electricity supply?

_____

Give a reason for your answer.

_____

_____

(2)

(b) The picture shows two adaptors being used to plug five electrical appliances into the same socket.

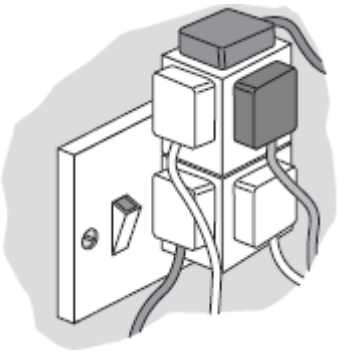

Explain why it is dangerous to have all five appliances switched on and working at the same time.

_____

_____

_____

_____

(2)

(Total 4 marks)

Q2.

(a) The resistance of a 24 W, 12 V filament lamp depends on the current flowing through the lamp. For currents up to 0.8 A, the resistance has a constant value of

2.5 Ω.

(i) Use the equation in the box to calculate the potential difference across the lamp when a current of 0.8 A flows through the lamp.

potential difference = current × resistance

Show clearly how you work out your answer.

_____

_____

Potential difference = _____ V

(2)

(ii) When the potential difference across the lamp is 12 V, the current through the lamp is 2 A.

On the axes below, draw a current–potential difference graph for the filament lamp over the range of potential difference from 0 to 12 volts.

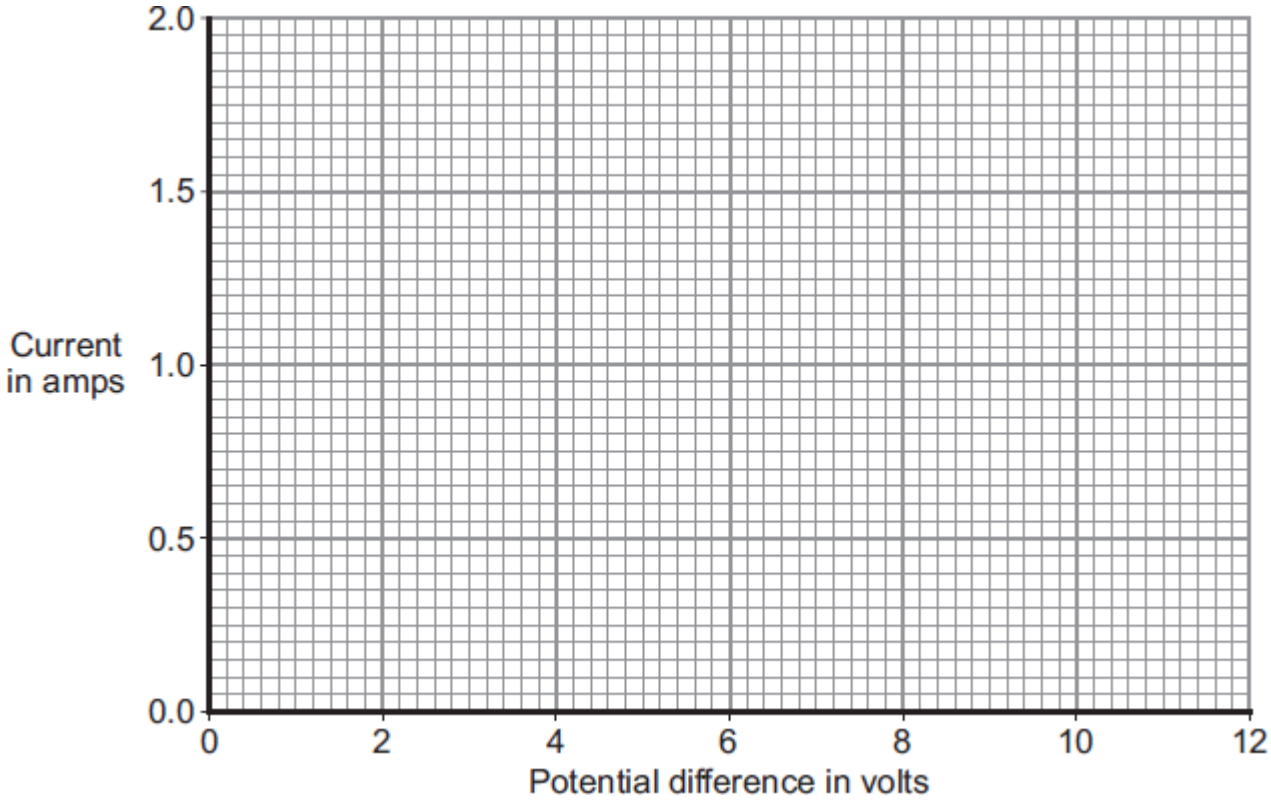

(2)

(iii) Why does the resistance of the lamp change when the current through the lamp exceeds 0.8 A?

_____

_____

(1)

(b) The lamp is now included in a circuit. The circuit is switched on for 2 minutes. During this time, 72 coulombs of charge pass through the lamp.

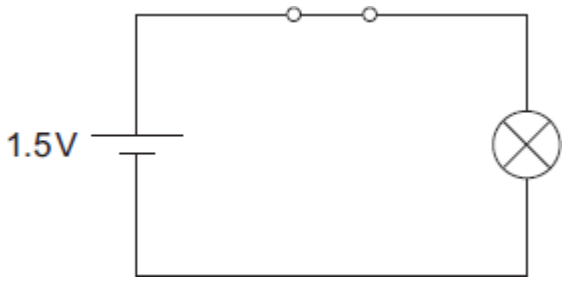

Use the equation in the box to calculate the energy transformed by the lamp while the circuit is switched on.

energy transformed	=	potential difference	×	charge

Show clearly how you work out your answer.

_____

_____

Energy transformed = _____ J

(2)

(Total 7 marks)

Q3.

The appliances shown below transfer electrical energy to other types of energy.

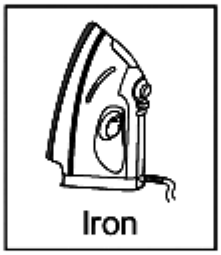

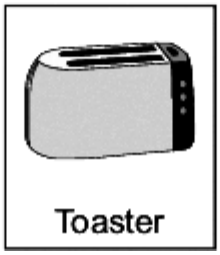

(a) The vacuum cleaner is designed to transfer electrical energy to kinetic energy.

Three more of the appliances are also designed to transfer electrical energy to kinetic energy. Which **three**?

Draw a ring around each correct appliance.

3

(b) Which **two** of the following statements are true?

Tick (✓) **two** boxes.

Appliances only transfer part of the energy usefully. ☐

The energy transferred by appliances will be destroyed. ☐

The energy transferred by appliances makes the surroundings warmer. ☐

The energy output from an appliance is bigger than the energy input. ☐

(2)

(Total 5 marks)

Q4.

(a) The bar chart shows the power of three different electric hairdryers.

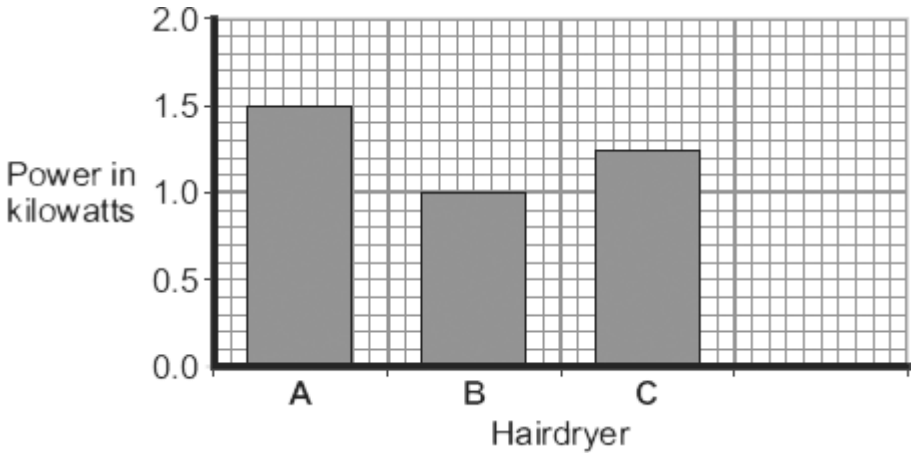

(i) Which **one** of the hairdryers, **A**, **B** or **C**, would transfer the most energy in 5 minutes?

Write the correct answer in the box. ☐

(1)

(ii) A small 'travel' hairdryer has a power of 500 watts.

Draw a fourth bar on the bar chart to show the power of the 'travel' hairdryer.

(1)

(b) A family shares the same hairdryer.
The hairdryer has a power of 1.2 kW. The hairdryer is used for a total of 2 hours each week.

(i) Calculate how many kilowatt-hours (kWh) of energy the hairdryer transfers in 2 hours.

Show clearly how you work out your answer.

_____

_____

Energy transferred = _____ kWh

(2)

(ii) Electricity costs 15 pence per kWh.

Calculate the cost of using the hairdryer for 2 hours.

Show clearly how you work out your answer.

_____

_____

Cost = _____ pence

(2)

(Total 6 marks)

Q5.

(a) The diagram shows a simple circuit.

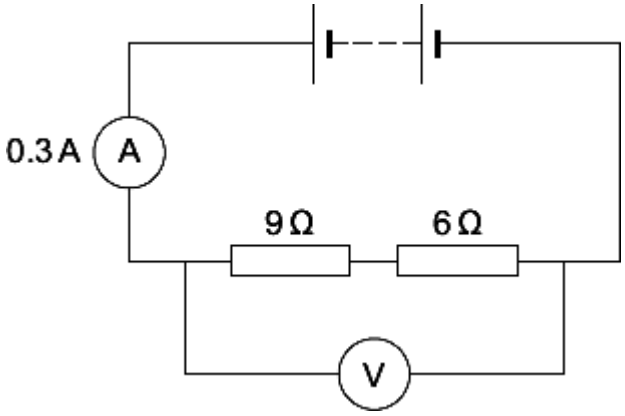

(i) Calculate the total resistance of the two resistors in the circuit.

_____

Total resistance = _____ Ω

(1)

(ii) Calculate the reading on the voltmeter.

Show clearly how you work out your answer.

_____

_____

Voltmeter reading = _____ V

(2)

(iii) Draw a ring around the correct answer in the box to complete the sentence.

Replacing one of the resistors with a resistor of higher value will

decrease
not change
increase

the reading on the ammeter.

(1)

(b) The voltmeter in the circuit is replaced with an oscilloscope.

Which one of the diagrams, **X**, **Y** or **Z**, shows the trace that would be seen on the oscilloscope?

Write your answer, **X**, **Y** or **Z**, in the box.

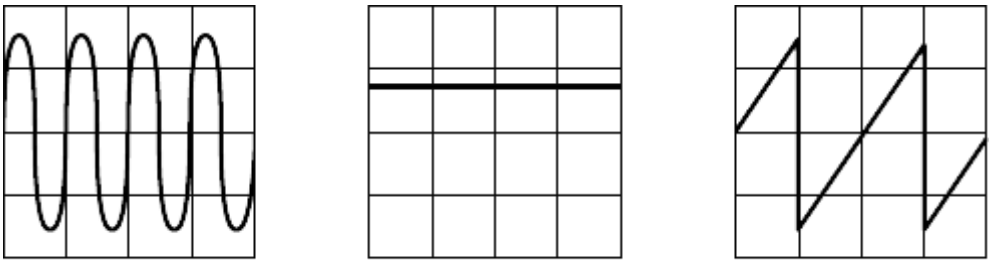

Diagram ☐

Give a reason for your answer.

_____

_____

_____

(2)

(Total 6 marks)

Q6.

A student used the apparatus below to find out how the resistance of a light-dependent resistor (LDR) depends on light intensity.

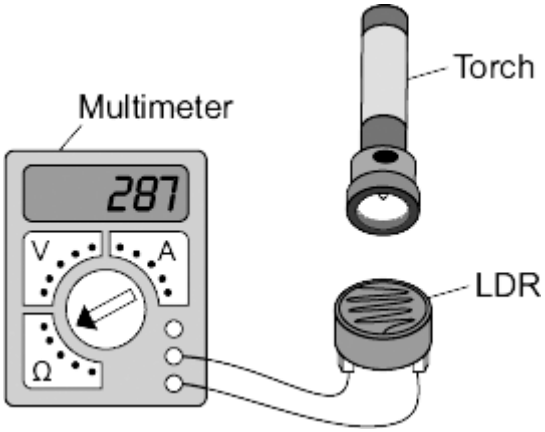

The resistance of the LDR was measured directly using a multimeter.

(a) (i) Which **one** of the following is the correct circuit symbol for a LDR?

Draw a ring around your answer.

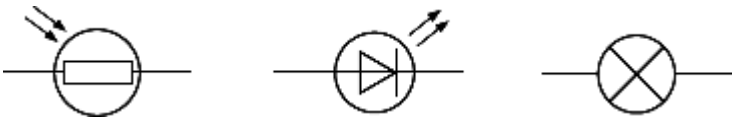

(1)

(ii) Name **one** factor that will affect the intensity of the light hitting the LDR.

_____

_____

(1)

(b) The manufacturer of the LDR provides data for the LDR in the form of a graph.

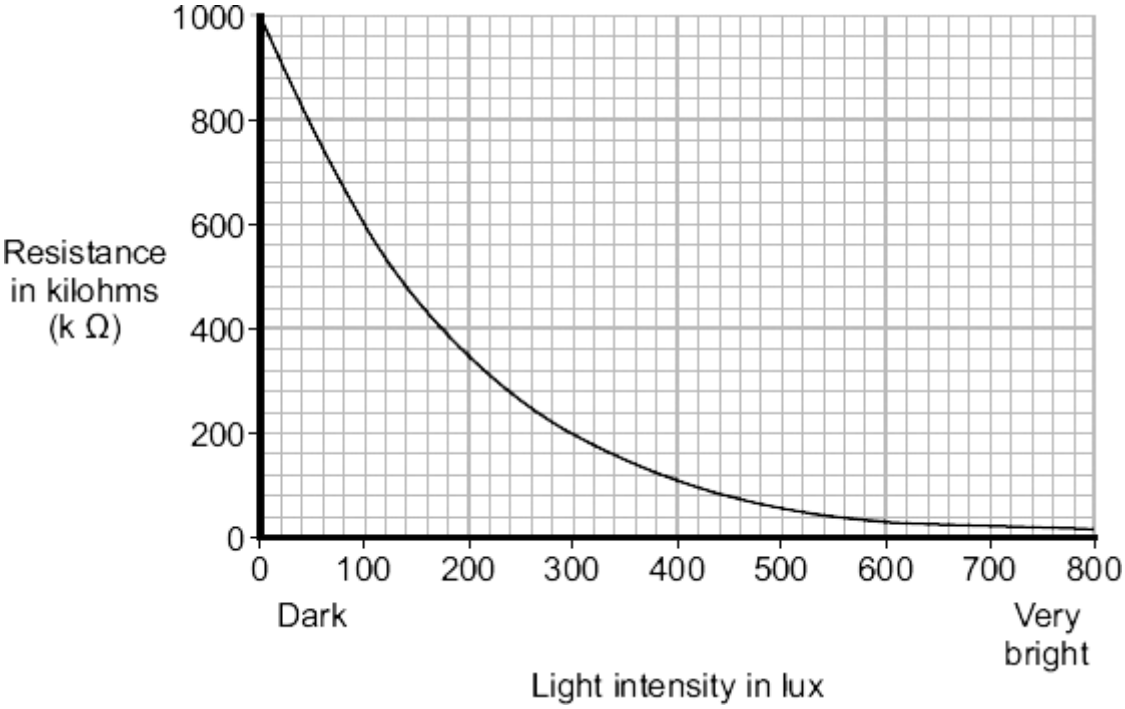

Describe how the resistance of the LDR changes when the light intensity increases from 100 lux to 300 lux.

_____

_____

_____

(2)

(c) The student only obtained three results. These are given in the table.

Light intensity	**Resistance in kilohms**
Dark	750
Bright	100
Very bright	1

(i) The student could **not** use the results to draw a line graph.
Why not?

_____

_____

(1)

(ii) Do the student's results agree with the data the manufacturer provided?

Draw a ring around your answer. YES NO

Give a reason for your answer.

_____

_____

_____

(1)

(d) Which **one** of the following circuits probably includes a LDR?

Tick (✓) **one** box.

A circuit that automatically switches outside lights on when it gets dark. ☐

A circuit that automatically switches central heating on and off. ☐

A circuit that automatically turns lights off when no one is in the room. ☐

(1)
(Total 7 marks)

Q7.

(a) The diagram shows a piece of two-core cable and a piece of three-core cable.

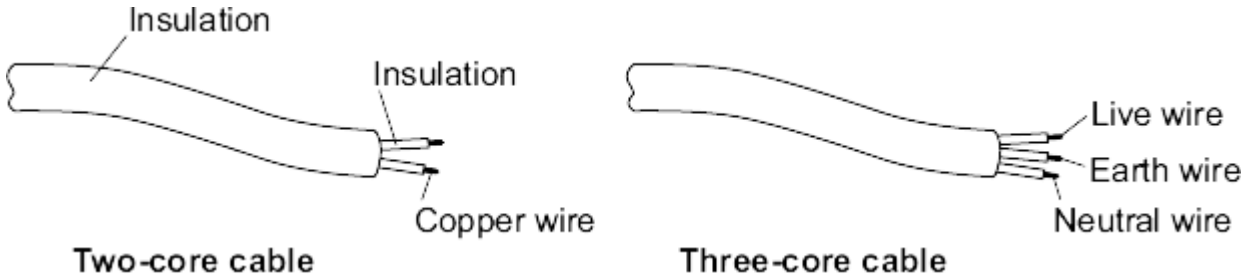

(i) Which **one** of the wires inside a three-core cable is missing from a two-core cable?

Draw a ring around your answer.

earth wire **live wire** **neutral wire**

(1)

(ii) Use a word from the box to complete the following sentence.

double	**extra**	**totally**

A pottery table lamp fitted with a two-core cable is safe to use because it is

_____ insulated.

(1)

(b) The cables connecting the power sockets in a building contain wires 1.8 mm thick. The maximum current that can safely pass through these wires is 20 amps. A fuse is included in the circuit to protect the wiring.

Explain how a fuse protects the wiring of a circuit.

_____

_____

_____

_____

_____

_____

_____

(3)

(Total 5 marks)

Q8.

The graph shows how the electric current through a 12 V filament bulb varies with the potential difference across the bulb.

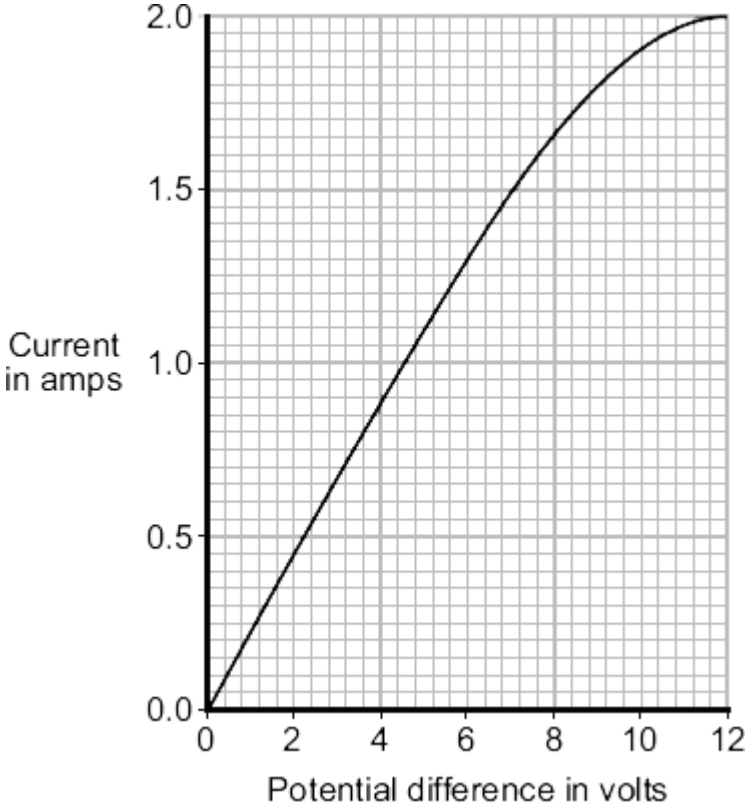

(a) What is the meaning of the following terms?

electric current

_____

_____

potential difference

_____

_____

(2)

(b) The resistance of the metal filament inside the bulb increases as the potential difference across the bulb increases.

Explain why.

_____

_____

_____

_____

_____

_____

_____

_____

(3)

(c) Use data from the graph to calculate the rate at which the filament bulb transfers energy, when the potential difference across the bulb is 6 V.

Show clearly how you work out your answer.

_____

_____

Rate of energy transfer = _____ W

(2)

(Total 7 marks)

Q9.

Each letter, **A**, **B**, **C**, **D** and **E**, represents an energy transformation.

A electrical to chemical
B electrical to heat
C electrical to kinetic
D electrical to light
E electrical to sound

Match each of the following devices to the useful energy transformation that the device is designed to make.

Write the correct letter, **A**, **B**, **C**, **D** or **E**, in the box below each device.

Use each letter no more than once.

Fan	Kettle	Lamp	Radio
		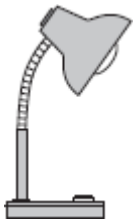	
☐	☐	☐	☐

(Total 4 marks)

Q10.

(a) The diagram shows the energy transformations produced by a television.

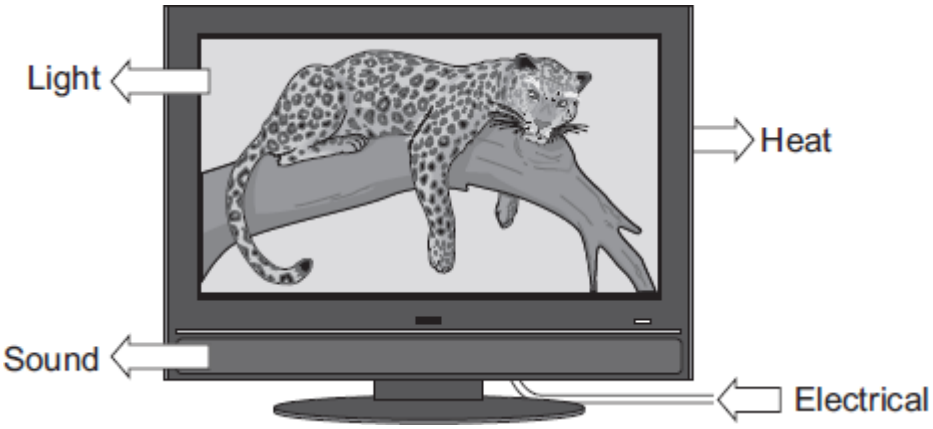

When the television is working, 1200 joules of energy are supplied to the television every second. The useful energy transferred by the television is 720 joules every second.

(i) Use the equation in the box to calculate the efficiency of the television.

$$\text{efficiency} = \frac{\text{useful energy transferred by the device}}{\text{total energy supplied to the device}}$$

Show clearly how you work out your answer.

_____

_____

Efficiency = _____

(2)

(ii) Use **one** word from the diagram to complete the following sentence.

The electrical energy that is **not** usefully transformed by the television is

wasted as _____ .

(1)

(b) A homeowner is sent an electricity bill every 3 months. The total amount of electrical energy used during one 3-month period was 800 kilowatt-hours.
Electrical energy costs 15p per kilowatt-hour.

Use the equation in the box to calculate the cost of the energy transferred from the mains electricity supply.

total cost	=	number of kilowatt-hours	×	cost per kilowatt-hour

Show clearly how you work out your answer and give the unit.

_____

_____

Cost = _____

(2)

(Total 5 marks)

Q11.

A homeowner had a new gas boiler installed.

(a) The following information is an extract from the information booklet supplied with the boiler.

Fuel	Natural Gas
Water temperature	60 °C
Energy supplied to gas boiler	8.0 kJ/s (8.0 kW)
Efficiency	0.95

(i) Calculate the energy transferred each second by the gas boiler to the water inside the boiler.

Show clearly how you work out your answer.

_____

_____

Energy transferred by the gas boiler each second = _____ kJ

(2)

(ii) The energy value of the gas used in a home is measured in kilowatt-hours (kWh).

The homeowner has a pre-payment meter and pays £30 into his account. With a pre-payment meter, gas costs 15p per kilowatt-hour.

Calculate the total number of hours that the gas boiler would operate for £30.

Show clearly how you work out your answer.

_____

_____

_____

_____

Number of hours = _____

(2)

(b) Although the gas boiler is very efficient, some energy is wasted.

Explain what happens to the waste energy.

_____

_____

_____

_____

(2)

(Total 6 marks)

Q12.

(a) The diagram shows the circuit that a student used to investigate how the current through a resistor depends on the potential difference across the resistor.

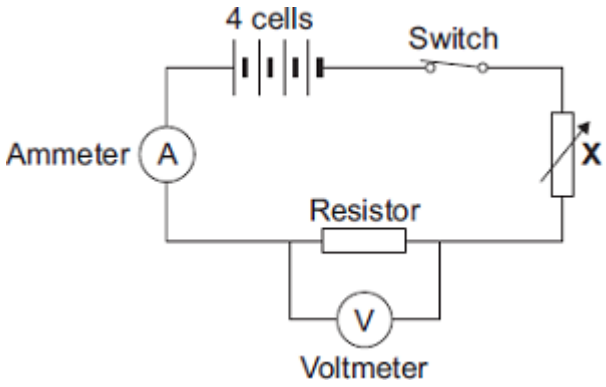

(i) Each cell provides a potential difference of 1.5 volts.

What is the total potential difference provided by the four cells in the circuit?

_____

Total potential difference = _____ volts

(1)

(ii) The student uses the component labelled **X** to change the potential difference across the resistor.

What is component **X**?

Draw a ring around your answer.

light-dependent resistor **thermistor** **variable resistor**

(1)

(iii) Name a component connected in parallel with the resistor.

_____

(1)

(b) The results obtained by the student have been plotted on a graph.

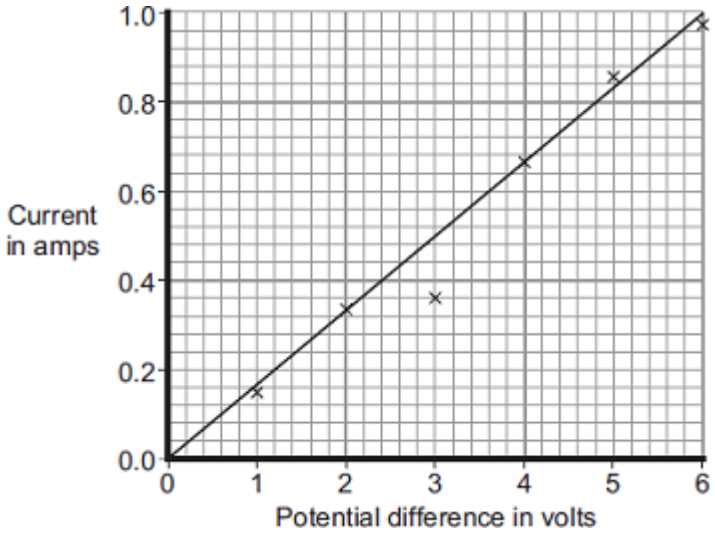

(i) One of the results is anomalous.

Draw a ring around the anomalous result.

(1)

(ii) Which **one** of the following is the most likely cause of the anomalous result?

Put a tick (✓) in the box next to your answer.

The student misread the ammeter. ☐

The resistance of the resistor changed. ☐

The voltmeter had a zero error. ☐

(1)

(iii) What was the interval between the potential difference values obtained by the student?

_____

_____

(1)

(c) Describe the relationship between the potential difference across the resistor and the current through the resistor.

_____

_____

(1)

(Total 7 marks)

Q13.

The diagram shows a helicopter being used to rescue a person from the sea.

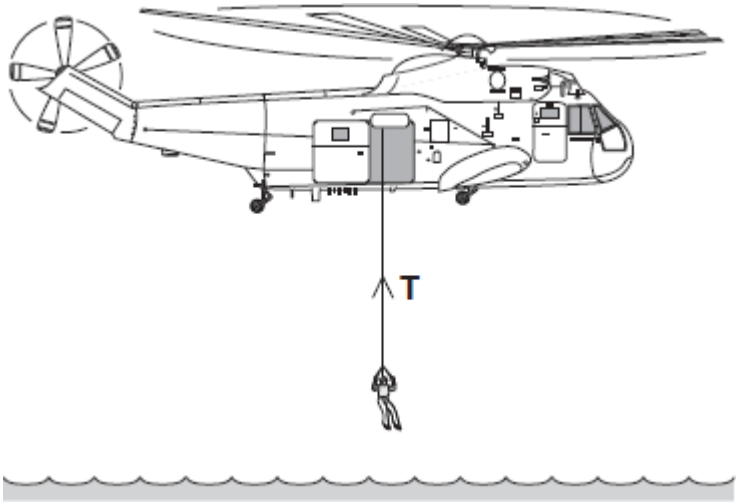

(a) (i) The mass of the rescued person is 72 kg.

Use the equation in the box to calculate the weight of the rescued person.

weight = mass × gravitational field strength

gravitational field strength = 10 N/kg

Show clearly how you work out your answer.

_____

_____

Weight = _____ N

(2)

(ii) An electric motor is used to lift the person up to the helicopter.
The motor lifts the person at a constant speed.

State the size of the force, **T**, in the cable.

Force **T** = _____ N

(1)

(b) To lift the person up to the helicopter, the electric motor transformed 21 600 joules of energy usefully.

(i) Use a form of energy from the box to complete the following sentence.

gravitational potential	heat	sound

The electric motor transforms electrical energy to kinetic energy. The kinetic energy

is then transformed into useful _____ energy.

(1)

(ii) It takes 50 seconds for the electric motor to lift the person up to the helicopter.

Use the equation in the box to calculate the power of the electric motor.

$$\text{power} = \frac{\text{energy transformed}}{\text{time}}$$

Show clearly how you work out your answer and give the unit.

Choose the unit from the list below.

coulomb (C) **hertz (Hz)** **watt (W)**

_____

_____

Power = _____

(3)

(Total 7 marks)

Q14.

The diagram shows an electric circuit used in a dolls' house.
The switches are 2-way switches; this means that each switch has a connecting wire that can be in one of two positions.

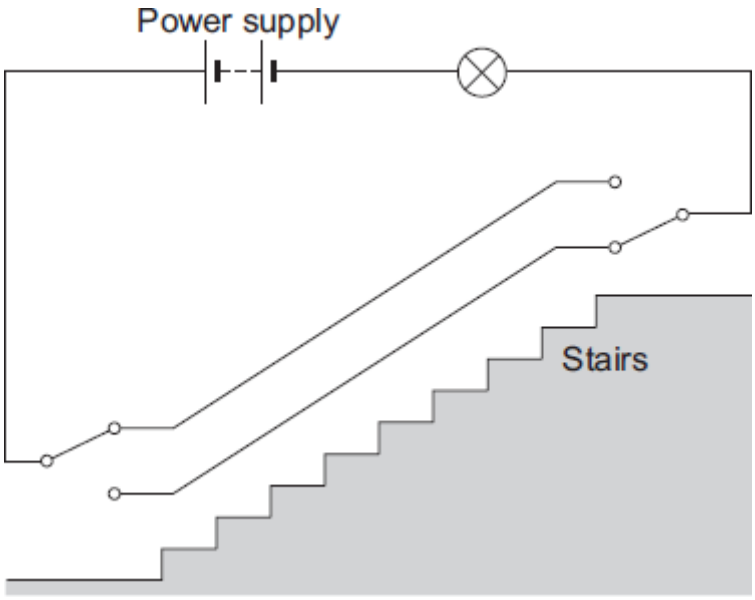

(a) (i) With the connecting wire in each switch in the position shown in the diagram, the lamp is off. Why?

_____

_____

(1)

(ii) When switched on, the lamp has a resistance of 18 Ω and draws a current of 0.5 A from the power supply.

Use the equation in the box to calculate the potential difference of the power supply used in the circuit.

potential difference = current × resistance

Show clearly how you work out your answer.

_____

_____

Potential difference = _____ V

(2)

(iii) A second, identical lamp is added to the circuit. The two lamps are joined in series.

Calculate the total resistance of the two lamps.

_____

Total resistance = _____ Ω

(1)

(b) This type of circuit is also used in real houses. One of the switches is at the top of the stairs, and the other switch is at the bottom of the stairs.

What is the advantage of using this circuit to switch a lamp on or off, rather than using a more simple circuit that has only one switch?

_____

_____

(1)

(c) The diagram shows an old type of metal lamp fitting.

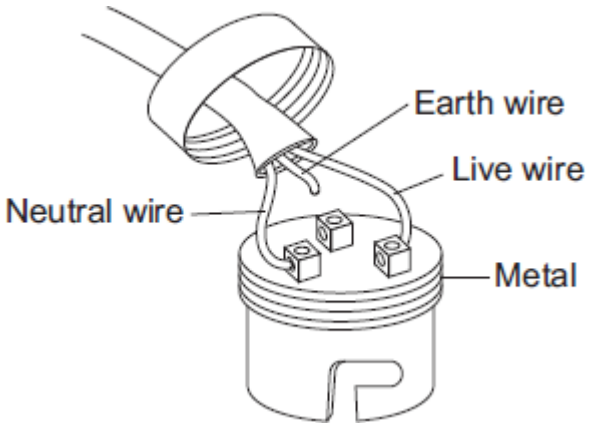

The cable has been connected to the lamp fitting in a way that makes the lamp fitting unsafe.

(i) What is the possible risk to someone touching the lamp fitting while the lamp is switched on?

_____

_____

(1)

(ii) What should be done to make **this** lamp fitting safe to use?

_____

_____

(1)

(Total 7 marks)

Q15.

The diagram shows the circuit set up by a student.

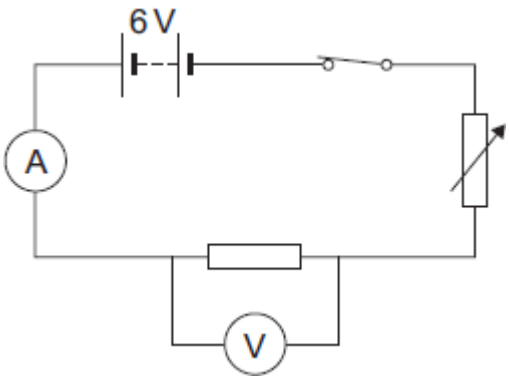

(a) The student uses the circuit to test the following hypothesis:

'The current through a resistor is directly proportional to the potential difference across the resistor.'

(i) If the hypothesis is correct, what should the student predict will happen to the current through the resistor when the potential difference across the resistor is doubled?

_____

_____

(1)

(ii) Name the component in the circuit used to change the potential difference across the resistor.

_____

(1)

(b) The student used the data obtained to plot the points for a graph of current against potential difference.

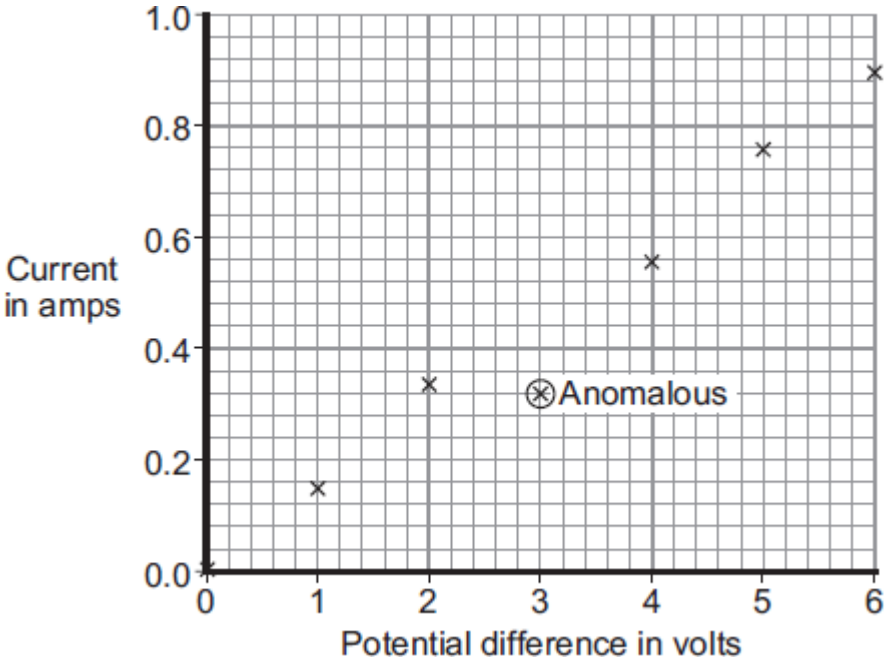

(i) Why has the student plotted the points for a line graph and not drawn a bar chart?

_____

_____

(1)

(ii) One of the points has been identified by the student as being anomalous.

What is the most likely cause for this anomalous point?

_____

_____

(1)

(iii) Draw a line of best fit for these points.

(1)

(iv) Does the data the student obtained support the hypothesis?

Give a reason for your answer.

_____

_____

(1)
(Total 6 marks)

Q16.

The picture shows an electric bicycle. The bicycle is usually powered using a combination of the rider pedalling and an electric motor.

(a) A 36 volt battery powers the electric motor. The battery is made using individual 1.2 volt cells.

(i) Explain how a 36 volt battery can be produced using individual 1.2 volt cells.

To gain full marks, you must include a calculation in your answer.

_____

_____

_____

_____

(2)

(ii) The battery supplies a direct current (d.c.).

What is a *direct current (d.c.)*?

_____

_____

(1)

(iii) When fully charged, the battery can deliver a current of 5 A for 2 hours. The battery is then fully discharged.

Calculate the maximum charge that the battery stores.

Show clearly how you work out your answer and give the unit.

_____

_____

Charge stored = _____

(3)

(b) When powered only by the electric motor, the bicycle can carry a 90 kg rider at a maximum speed of 6 m/s. Under these conditions, the maximum distance that the

bicycle can cover before the battery needs recharging is 32 km.

The bicycle has a mass of 30 kg.

(i) Calculate the maximum kinetic energy of the bicycle **and** rider when the rider is not pedalling.

Show clearly how you work out your answer.

_____

_____

Kinetic energy = _____ J

(2)

(ii) The bicycle can be fitted with panniers (bags) to carry a small amount of luggage.

What effect would fitting panniers and carrying luggage have on the distance the bicycle can cover before the battery needs recharging?

_____

Give a reason for your answer.

_____

_____

(2)

(Total 10 marks)

Q17.

(a) The lamps in the circuits drawn below are all identical.
Each of the cells has a potential difference of 1.5 volts.

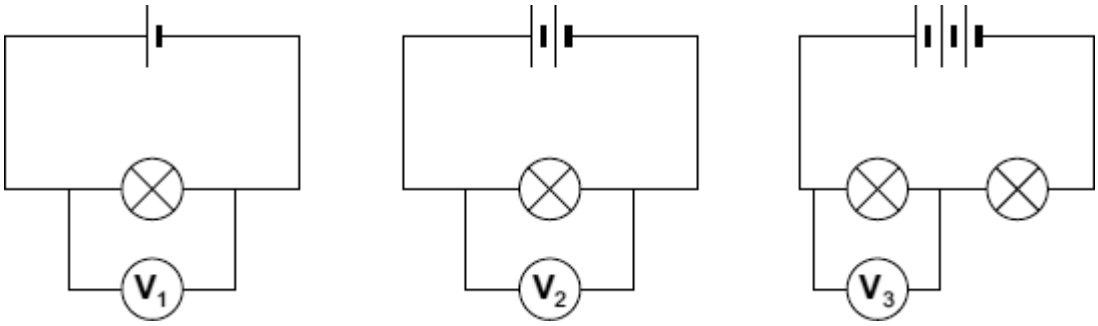

(i) What is the potential difference across the 3 cells that are joined in series?

_____

Potential difference = _____ V

(1)

(ii) What will be the reading on the voltmeter labelled $\mathbf{V_3}$?

Voltmeter reading $\mathbf{V_3}$ = _____ V

(1)

(iii) Which voltmeter, V_1, V_2 or V_3, will give the highest reading?

Draw a ring around your answer.

V_1 V_2 V_3

(1)

(b) The diagram below shows a simple circuit.

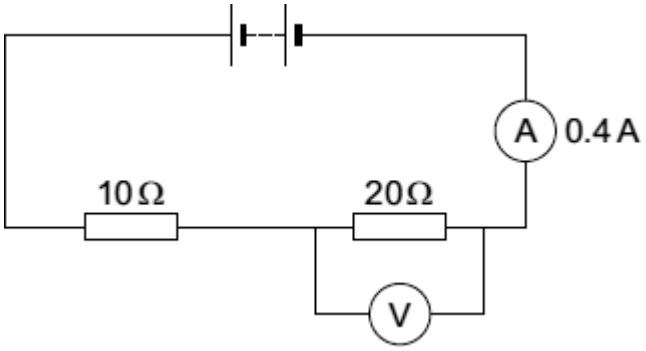

(i) Calculate the total resistance of the two resistors in the circuit.

_____

Total resistance = _____ Ω

(1)

(ii) Use the equation in the box to calculate the reading on the voltmeter.

potential difference = current × resistance

Show clearly how you work out your answer.

_____

_____

Voltmeter reading = _____ V

(2)

(iii) The current through a resistor at constant temperature changes when the potential difference across the resistor changes.

Which **one** of the graphs, **X**, **Y** or **Z**, shows how the current changes?

Write your answer, **X**, **Y** or **Z**, in the box.

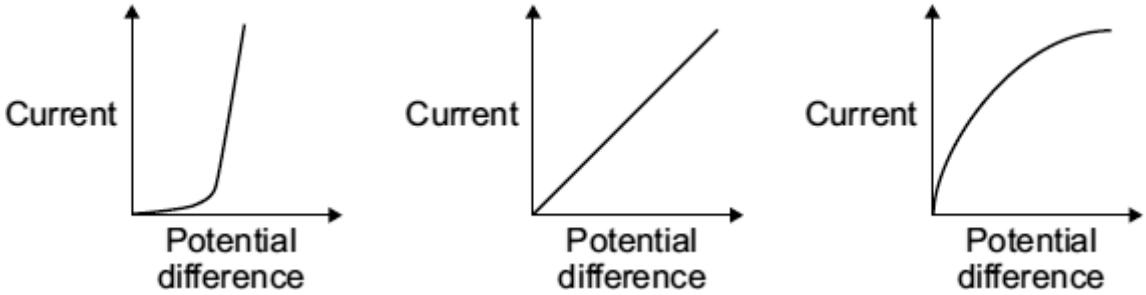

X Y Z

Graph ☐

(1)

(Total 7 marks)

Q18.

The diagrams show the inside of a 13 amp plug.

(a) (i) Which **one** of the plugs, **A**, **B**, **C** or **D**, is correctly wired?

Write your answer, **A**, **B**, **C** or **D**, in the box.

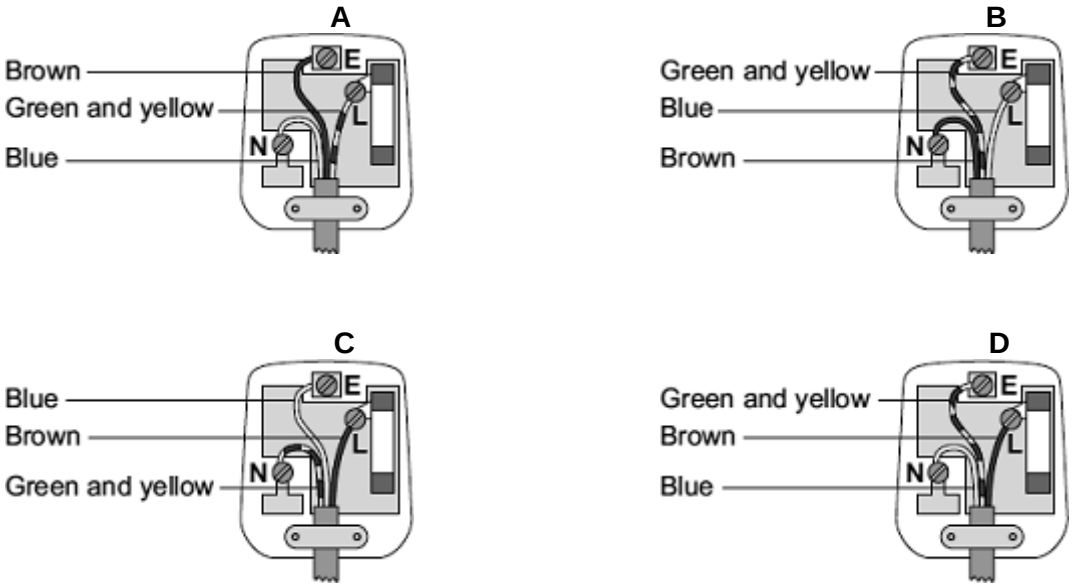

The plug that is correctly wired is ☐

(1)

(ii) What material is the outside casing of a plug made from?

_____

(1)

(b) An electric drill draws a current of 2 amps from the 230 volt mains electricity supply.

Use the equation in the box to calculate the power of the drill.

power = current × potential difference

Show clearly how you work out your answer.

_____

_____

Power _____ watts

(2)

(c) A householder needs to replace a damaged plug. Most replacement plugs are sold with a 13 amp fuse fitted inside. The householder thinks it would be better for shops to sell the plugs without a fuse. He could then buy either a 3 A, 5 A or 13 A fuse to fit inside the plug.

Explain an advantage of selling plugs without a fuse, rather than with a 13 amp fuse fitted.

_____

_____

_____

_____

(2)

(Total 6 marks)

Q19.

The current-potential difference graph for one type of electrical component is drawn below.

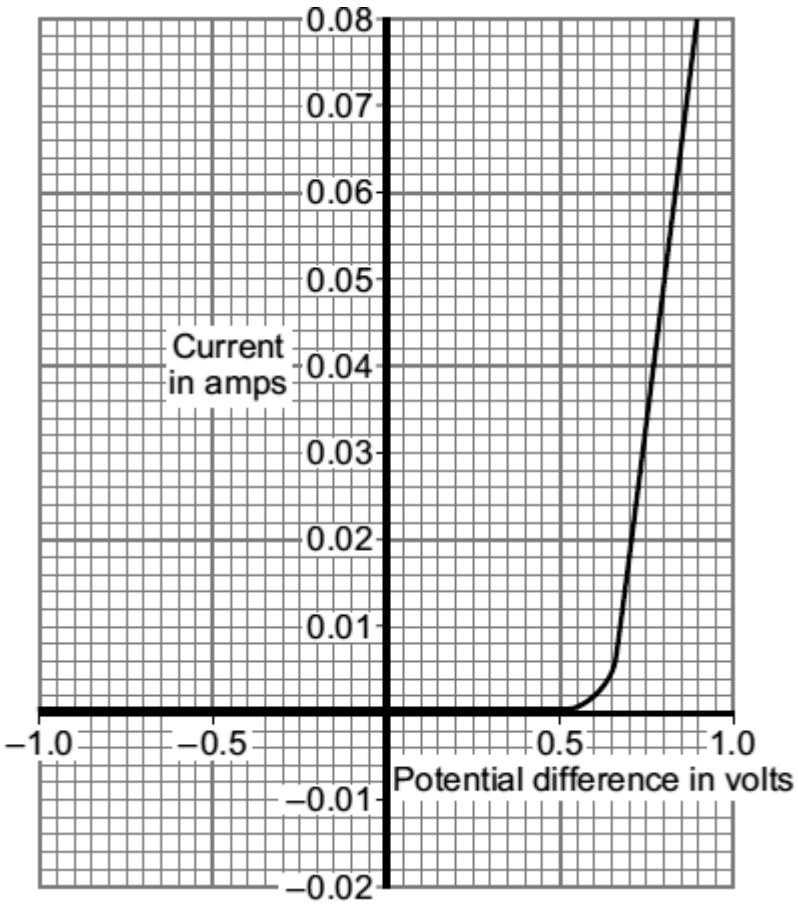

(a) What is the component?

_____

(1)

(b) Complete the diagram to show a circuit that can be used to obtain the data needed to plot the graph. Use the correct circuit symbol for each component that you add to the diagram.

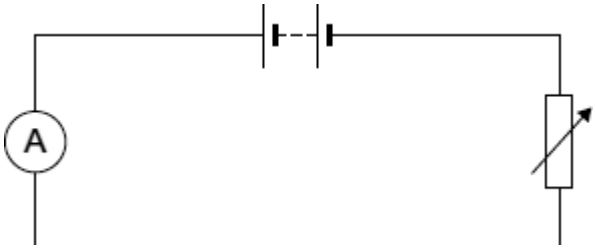

(2)

(c) (i) What is the current through the component when the potential difference across the component is 0.8 volts?

Current _____ amps

(1)

(ii) Calculate the resistance of the component when the potential difference across it is 0.8 volts.

Show clearly how you work out your answer.

_____

_____

Resistance = _____ Ω

(2)

(Total 6 marks)

Q20.

A set of lights consists of 20 lamps connected in series to the 230 V mains electricity supply.

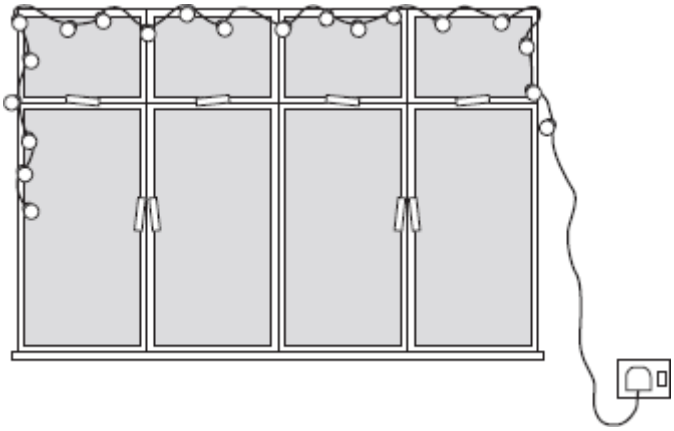

(a) When the lights are switched on and working correctly, the current through each lamp is 0.25 A.

(i) What is the total current drawn from the mains supply?

_____

(1)

(ii) Calculate the charge passing through **one** of the lamps in 5 minutes.

Show clearly how you work out your answer and give the unit.

_____

_____

_____

_____

Total charge = _____

(3)

(b) One of the lamps in the set is a fuse lamp. This contains a filament which melts if a fault occurs. A short time after the lights are switched on, a fault causes the filament inside the fuse lamp to melt and all the lamps go out.

The householder cannot find another fuse lamp so connects a piece of aluminium foil across the contacts inside the fuse lamp holder.
When switched on, the nineteen remaining lamps work.
What the householder has done is dangerous.

Explain why.

_____

_____

_____

_____

(2)

(Total 6 marks)

Q21.

The diagram shows four electrical appliances. Each appliance is designed to transform electrical energy into one form of output energy.

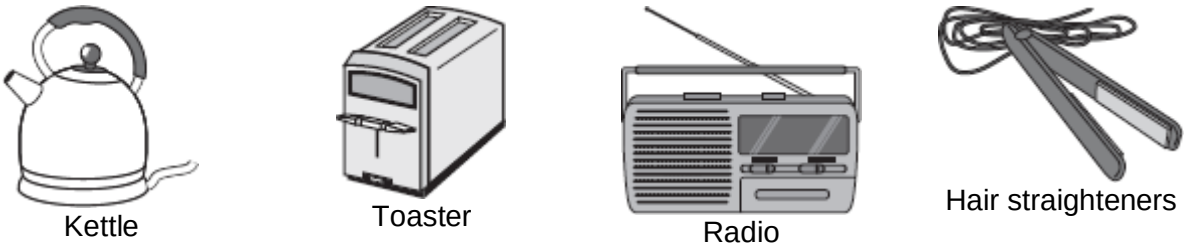

(a) Which **one** of the appliances is designed to give a different form of output energy from the other three appliances?

_____

Give a reason for your answer.

_____

_____

(2)

(b) The power of each appliance is given in the table.

Appliance	**Power**
Kettle	2.5 kW
Toaster	920 W
Radio	15 W
Hair straighteners	75 W

Each appliance is switched on for 5 minutes.

Which appliance transforms the most energy?

_____

(1)

(c) The 75 watt hair straighteners are switched on for a few minutes each day.
In one year, the amount of energy transferred from the mains electricity supply to the hair straighteners is 4 kilowatt-hours.

Electricity costs 15 p per kilowatt-hour.

Use the equation in the box to calculate the yearly cost of using the hair straighteners.

total cost = number of kilowatt-hours × cost per kilowatt-hour

Show clearly how you work out your answer.

_____

_____

Total cost = _____ pence

(2)

(d) The graph shows how the time to boil water in an electric kettle depends on the volume of water in the kettle.

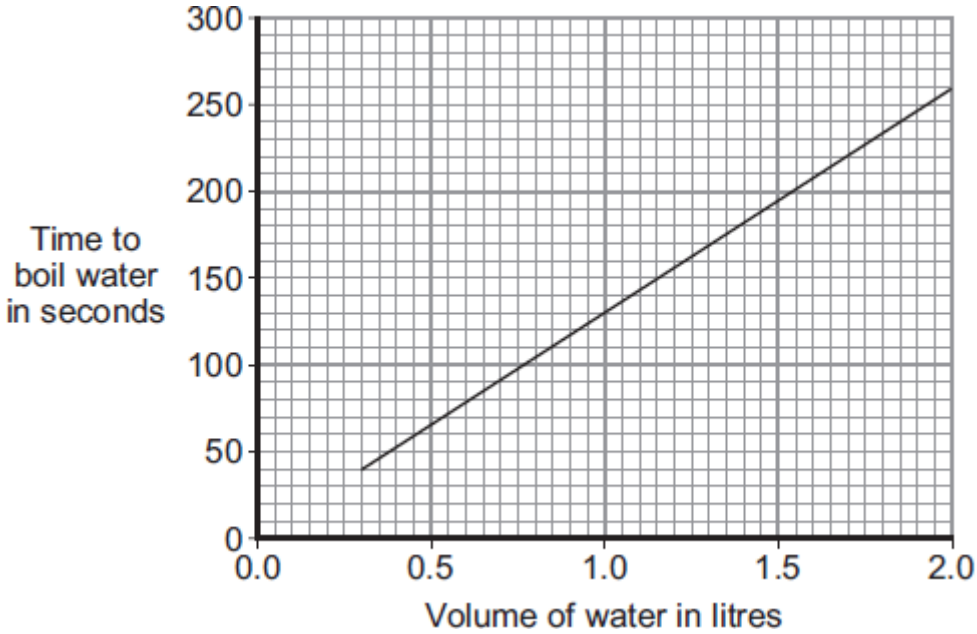

A householder always fills the electric kettle to the top, even when only enough boiling water for one small cup of coffee is required.

Explain how the householder is wasting money.

_____

_____

_____

_____

_____

_____

(3)

(Total 8 marks)

Q22.

Diagram 1 shows a hairdryer.
Diagram 2 shows how the heaters and fan of the hairdryer are connected to a 3-pin plug.
The hairdryer does not have an earth wire.

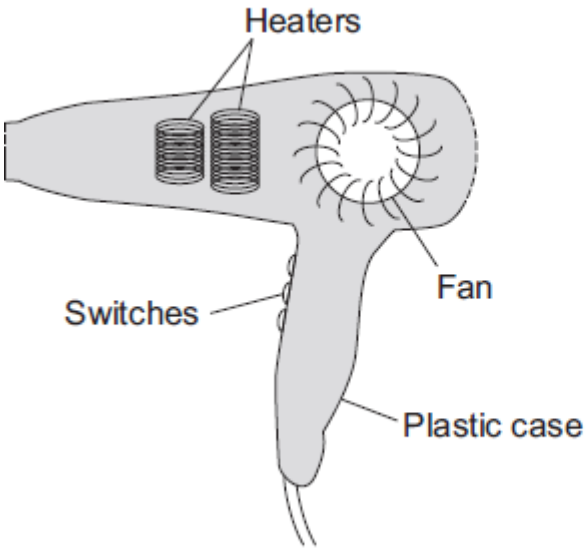

Diagram 1

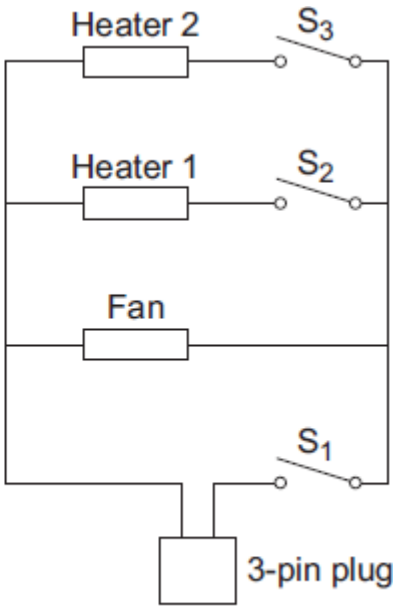

Diagram 2

(a) What colour is the insulation around the wire connected to the live pin inside the plug?

_____

(1)

(b) Why does the hairdryer **not** need an earth wire?

_____

_____

(1)

(c) All the switches are shown in the OFF position.

(i) Which switch or switches have to be ON to make:

(1) only the fan work; _____

(2) heater 2 work? _____

(2)

(ii) The heaters can only be switched on when the fan is also switched on.

Explain why.

_____

_____

_____

_____

_____

(2)

(d) The table shows the current drawn from the 230 volt mains electricity supply when different parts of the hairdryer are switched on.

	Current in amps
Fan only	1.0
Fan and heater 1	4.4
Fan and both heaters	6.5

Calculate the maximum power of the hairdryer.

Show clearly how you work out your answer and give the unit.

_____

_____

Maximum power = _____

(3)

(Total 9 marks)

Q23.

The diagram shows a strain gauge, which is an electrical device used to monitor a changing force.

Applying a force to the gauge causes it to stretch.
This makes the electrical resistance of the wire change.

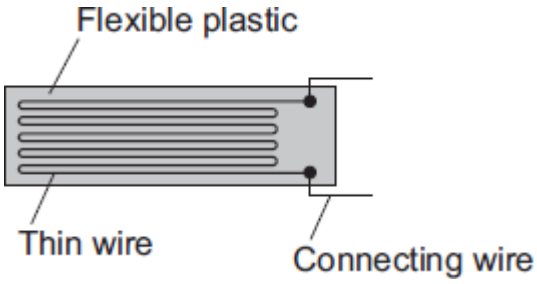

(a) (i) Using the correct symbols, **add** to the diagram to show how a battery, an ammeter and a voltmeter can be used to find the resistance of the strain gauge drawn above.

(2)

(ii) When in use, the strain gauge is always connected to a d.c. power supply, such as a battery.

How is a d.c. (direct current) power supply different from an a.c. (alternating

current) power supply?

_____

_____

_____

(1)

(b) Before any force is applied, the unstretched gauge, correctly connected to a 3.0 V battery, has a current of 0.040 A flowing through it.

(i) Calculate the resistance of the unstretched gauge.

Show clearly how you work out your answer.

_____

_____

Resistance = _____ Ω

(2)

(ii) Stretching the gauge causes the current flowing through the gauge to decrease.

What happens to the resistance of the gauge when it is stretched?

_____

_____

(1)

(iii) What form of energy is stored in the gauge when a force is applied and the gauge stretches?

_____

(1)

(Total 7 marks)

Q24.

The picture shows a new washing machine. When the door is closed and the machine switched on, an electric motor rotates the drum and washing.

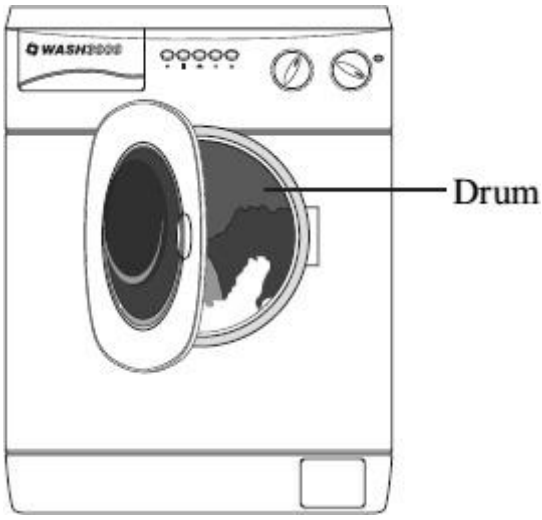

(a) What happens to the energy wasted by the electric motor?

_____

_____

(1)

(b) The diagram shows the label from the new washing machine.

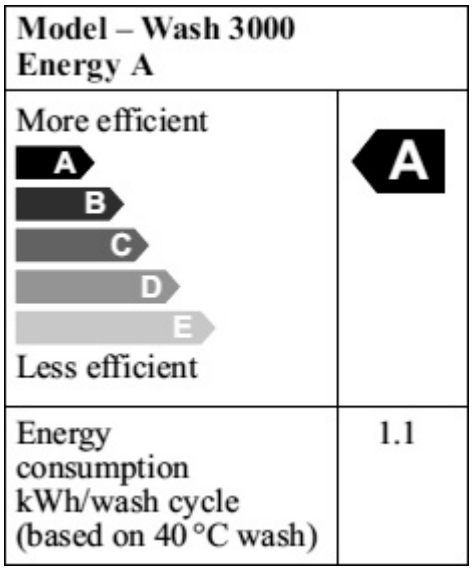

Model – Wash 3000 Energy A	
More efficient A B C D E Less efficient	A
Energy consumption kWh/wash cycle (based on 40 °C wash)	1.1

An ‘A’ rated washing machine is *more energy efficient* than a ‘C’ rated washing machine.

Explain what being *more energy efficient* means.

_____

_____

_____

_____

(2)

(c) The graph shows that washing clothes at a lower temperature uses less energy than washing them at a higher temperature. Using less energy will save money.

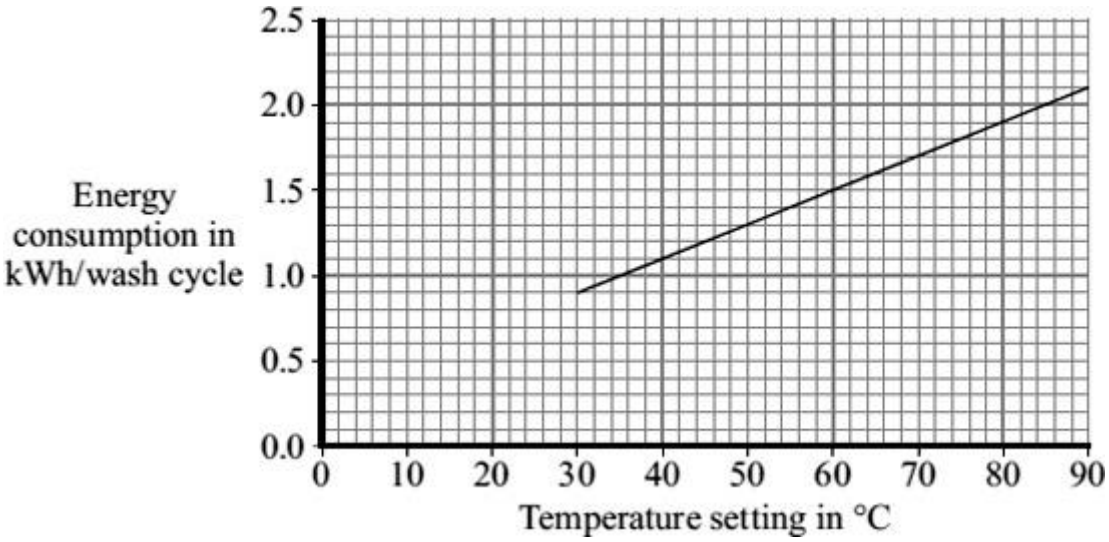

(i) Electricity costs 12 p per kilowatt-hour (kWh).
The temperature setting is turned down from 40 °C to 30 °C.

Use the graph and equation in the box to calculate the money saved each wash cycle.

total cost = number of kilowatt-hours × cost per kilowatt-hour

Show clearly how you work out your answer.

_____

_____

Money saved = _____ p

(2)

(ii) Suggest why reducing the amount of energy used by washing machines could reduce the amount of carbon dioxide emitted into the atmosphere.

_____

_____

(1)

(Total 6 marks)

Q25.

A circuit diagram is shown below.

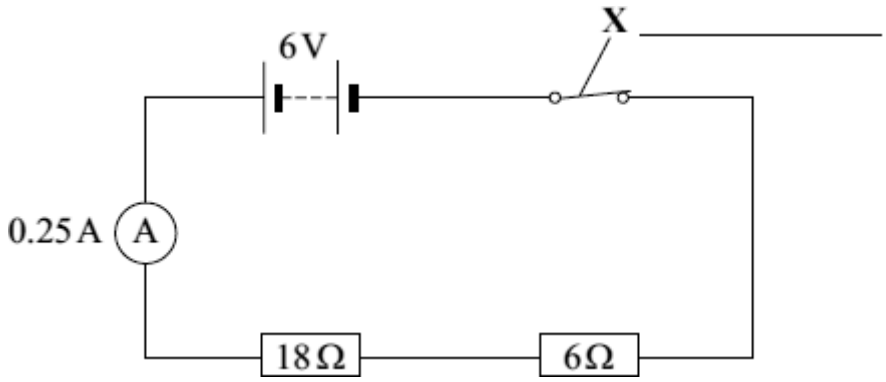

(a) Use a word from the box to label component **X**.

fuse	**switch**	**thermistor**

(1)

(b) Calculate the total resistance of the two resistors in the circuit.

_____

Total resistance = _____ Ω

(1)

(c) The reading on the ammeter is 0.25 A.

The current through the 6 Ω resistor will be:

bigger than 0.25 A **equal to 0.25 A** **smaller than 0.25 A**

Draw a ring around your answer

(1)

(d) The 6 V battery is made by correctly joining several 1.5 V cells in series.

Calculate the number of cells needed to make the battery.

_____

Number of cells = _____

(1)

(Total 4 marks)

Q26.

The diagram shows a simple circuit.

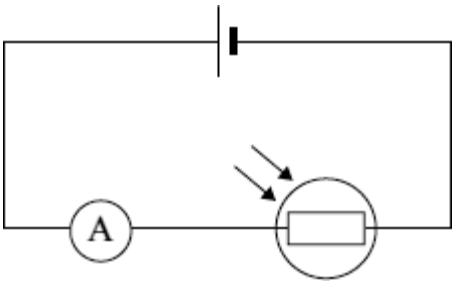

(a) The circuit includes an LDR.

What do the letters LDR stand for?

Draw a ring around your answer.

Light-dependable resistor **light-dependent resistor** **light-direct resistor**

(1)

(b) The graph shows how the resistance of an LDR changes with light intensity.

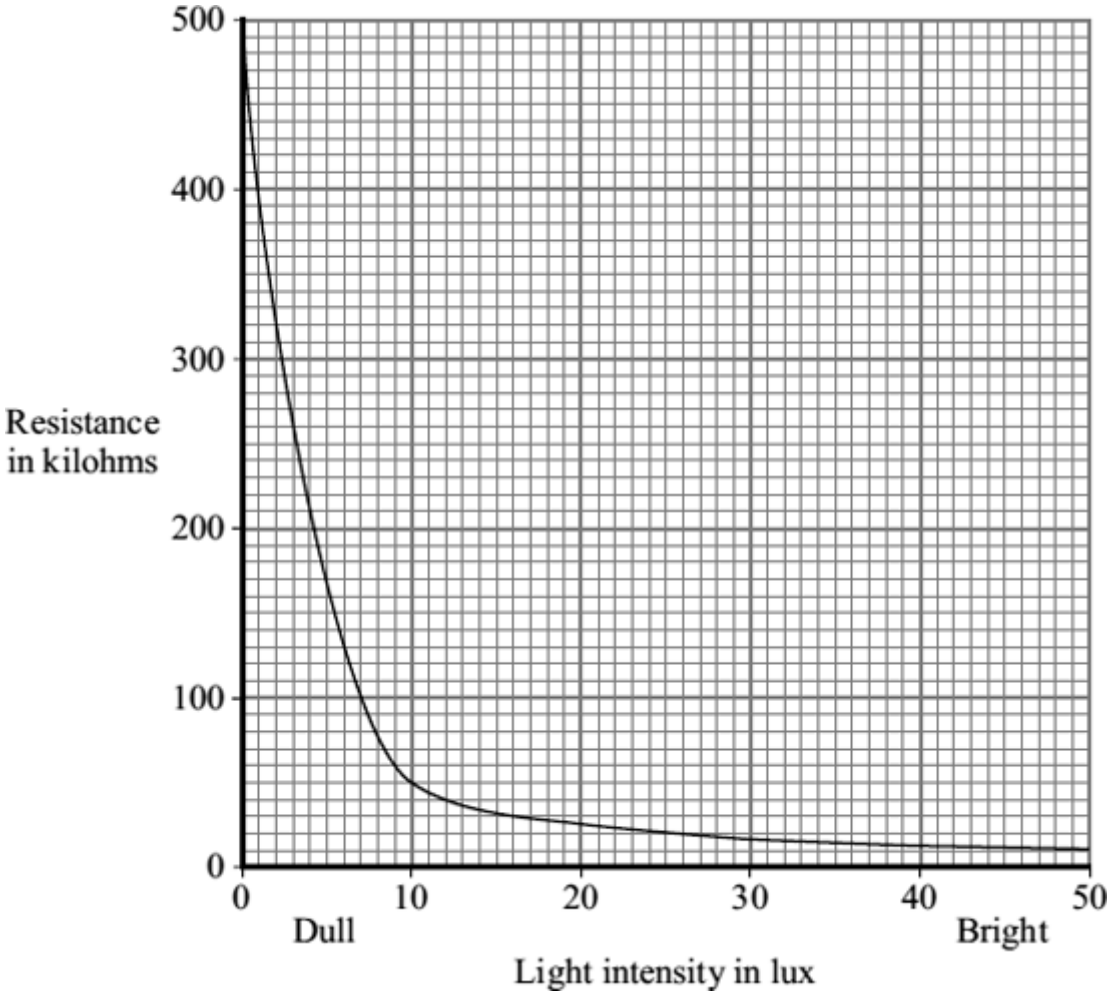

Describe in detail how the resistance of the LDR changes as the light intensity increases from 0 to 50 lux.

_____

_____

_____

_____

_____

_____

(3)

(c) (i) Complete the following sentence by drawing a ring around the correct line in the box.

A decrease in the light intensity of light on the LDR will

decrease
not change
increase

the reading on the ammeter.

(1)

(ii) Give a reason for your answer to part (c)(i).

_____

_____

(1)

(d) An LDR can be used to switch a circuit on and off automatically.

In which **one** of the following would an LDR be used?

Put a tick (✓) in the box next to your answer.

a circuit to switch on central heating when it gets cold ☐

a circuit to switch on security lighting when it gets dark ☐

a circuit to switch on a water sprinkler when the soil in a greenhouse is dry ☐

(1)
(Total 7 marks)

Q27.

The diagram shows a simple light-sensing circuit.

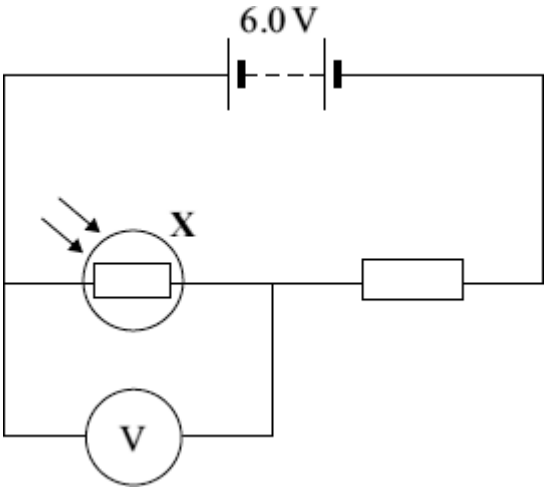

(a) The graph, supplied by the manufacturer, shows how the resistance of the component labelled **X** varies with light intensity.

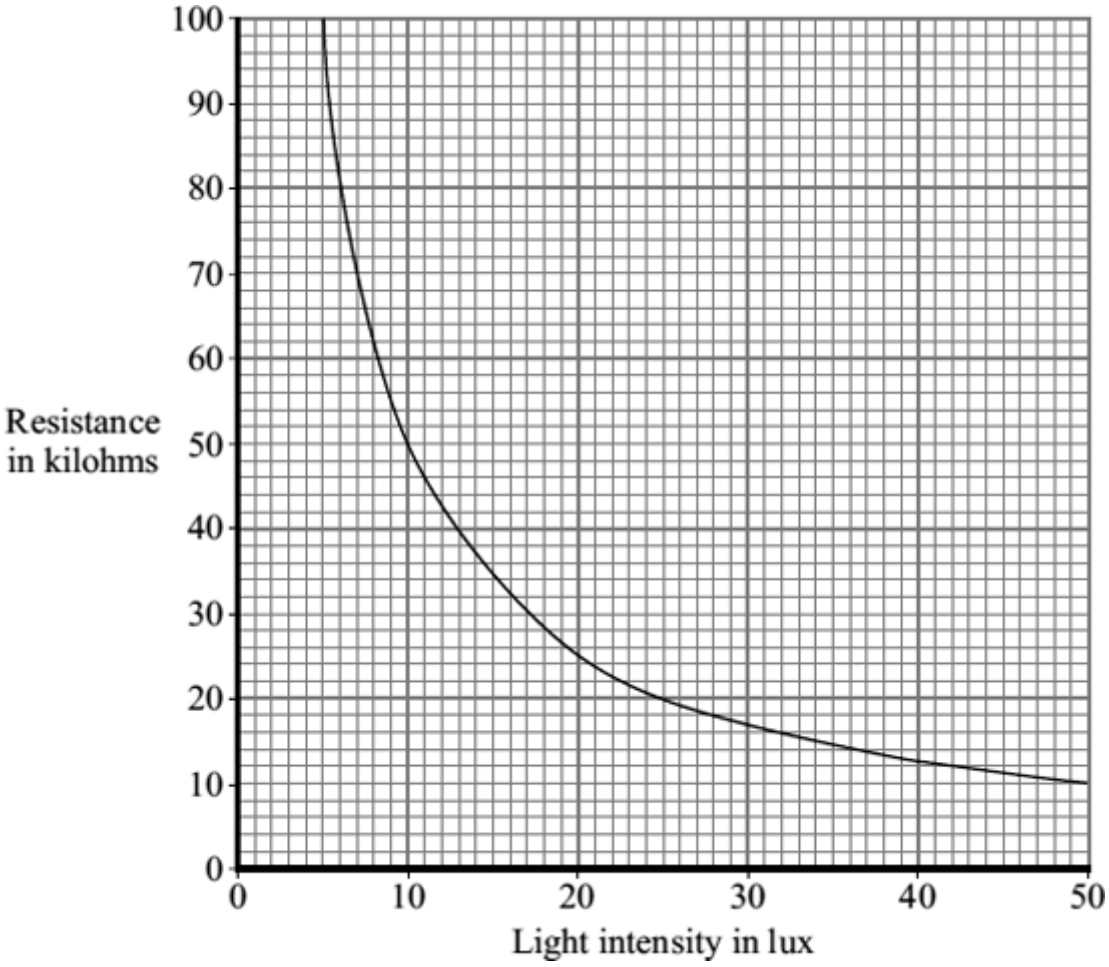

(i) What is component **X**?

_____

(1)

(ii) Use the graph to find the resistance of component **X** when the light intensity is 20 lux.

_____

(1)

(iii) When the light intensity is 20 lux, the current through the circuit is 0.0002 A.

Calculate the reading on the voltmeter when the light intensity is 20 lux.

Show clearly how you work out your answer.

_____

_____

Voltmeter reading =_____ volts

(2)

(b) Use the grid below to show how the voltmeter reading in the light-sensing circuit varies with light intensity.

(i) Add a suitable scale to the *y*-axis (vertical axis).

(1)

(ii) Complete the sketch graph by drawing a line on the grid to show how the voltmeter reading will vary with light intensity.

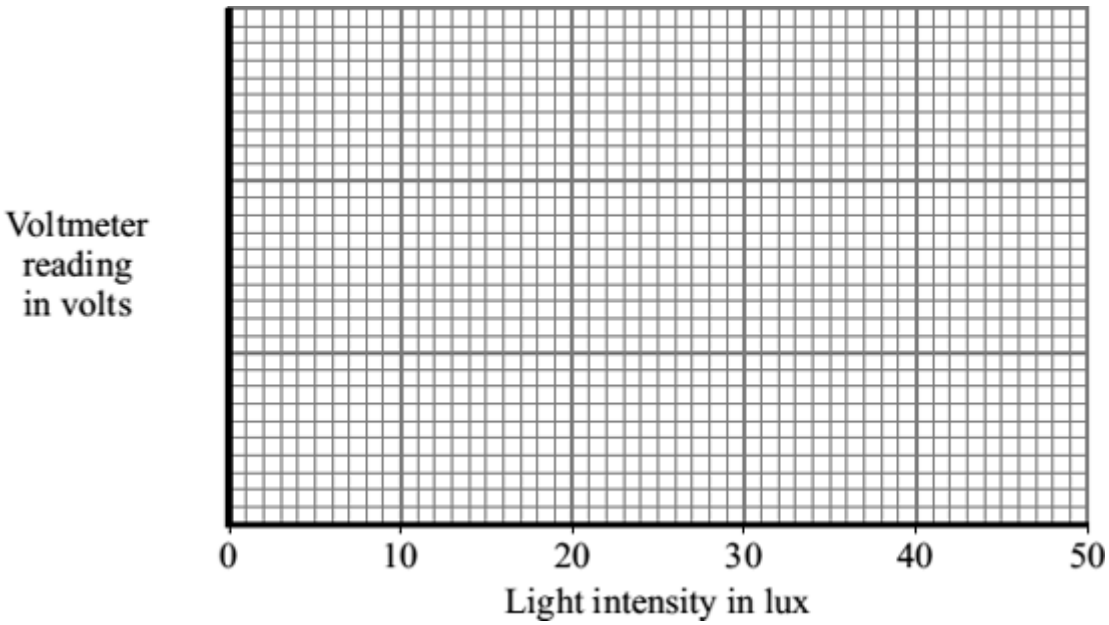

(2)

(c) The following passage is taken from the technical data supplied for component **X** by the manufacturer.

For any given light intensity, the resistance of this component can vary by plus or minus 50% of the value shown on the **graph of light intensity and resistance**.

(i) Calculate the maximum resistance that component **X** could have at 20 lux light intensity.

_____

Maximum resistance =_____ kilohms

(1)

(ii) Explain why this light-sensing circuit would **not** be used to measure values of light intensity.

_____

_____

_____

(2)

(Total 10 marks)

Q28.

(a) The diagram shows two switches on a room heater. The heater has three power settings. The power produced by two of the settings is given in the table.

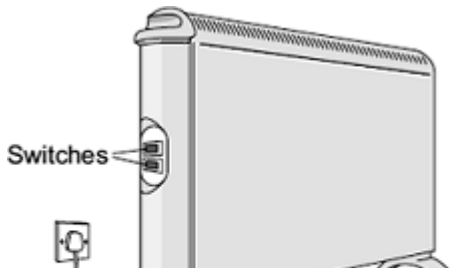

Setting	Power in kW

Low	0.5
Medium	1.5
High	

(i) When both switches are on, the heater works at the high power setting.

What is the power of the heater when it is switched to the **high** power setting?

_____

Power = _____ kW

(1)

(ii) The heater is used on the **medium** power setting. It is switched on for three hours.

Use the equation in the box to work out the energy transferred from the mains to the heater in three hours.

energy transferred (kilowatt-hour, kWh)	=	power (kilowatt, kW)	×	time (hour, h)

Show clearly how you work out your answer.

_____

_____

Energy transferred = _____ kWh

(2)

(iii) Electricity costs 12 pence per kilowatt-hour.

Use the equation in the box to calculate how much the heater costs to use on **medium** power for three hours.

total cost	=	number of kilowatt-hours	×	cost per kilowatt-hour

Show clearly how you work out your answer.

_____

_____

Total cost = _____ pence

(2)

(b) The heater is used to warm a room.

The graph shows how the temperature of the room changes from the moment the heater is switched on.

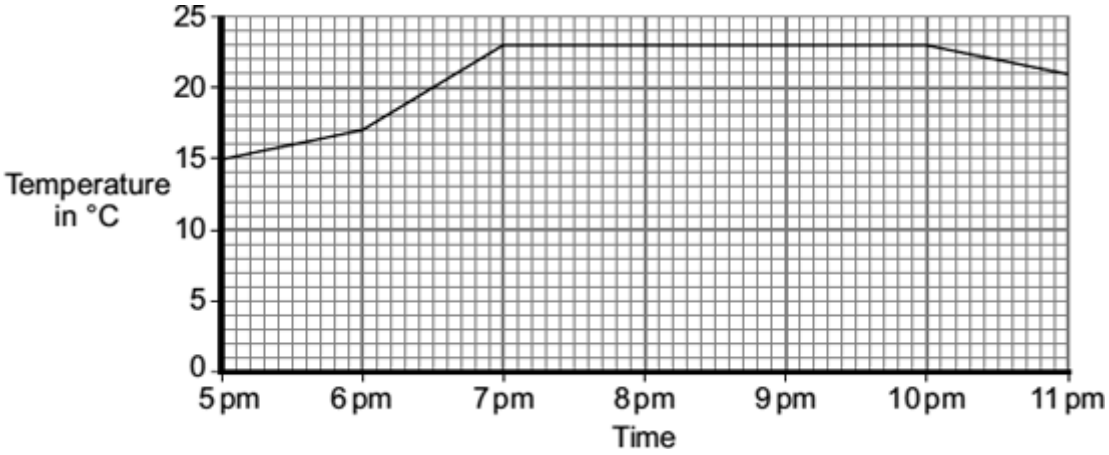

The heater was first used on the medium setting.

(i) At what time was the heater setting changed to the **high** setting?

_____

Give a reason for your answer.

_____

_____

_____

(2)

(ii) From 7 pm until 10 pm, the temperature of the room is **not** changing.

Which **one** of the following statements gives the reason why the temperature of the room is **not** changing?

Put a tick (✓) in the box next to your answer.

The room is losing energy slower than the heater supplies energy. ☐

The room is losing energy as fast as the heater supplies energy. ☐

The room is losing energy faster than the heater supplies energy. ☐

(1)

(Total 8 marks)

Q29.

A student used a joulemeter to measure the energy transformed by a lamp.

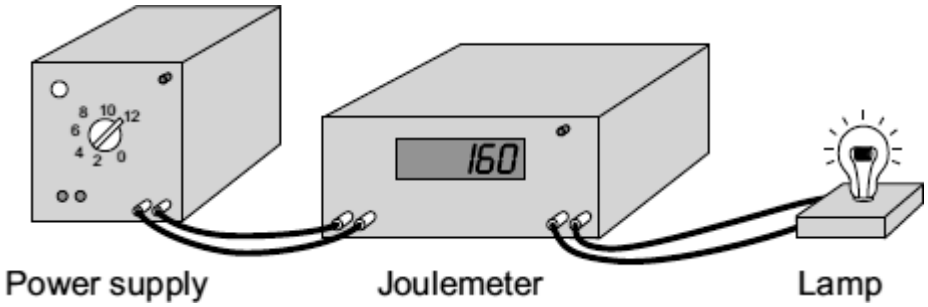

The student set the joulemeter to zero, and then switched on the power supply.

After 120 seconds (2 minutes), the reading on the joulemeter had increased to 2880.

(a) In the space below, draw the circuit symbol used to represent a lamp.

(1)

(b) (i) Use the equation in the box to calculate the power of the lamp.

$$\text{power} = \frac{\text{energy transformed}}{\text{time}}$$

Show clearly how you work out your answer.

_____

_____

Power = _____

(2)

(ii) Which **one** of the following is the unit of power?

Draw a ring around your answer.

joule **newton** **watt**

(1)

(c) Complete the following sentence using one of the phrases from the box.

larger than	the same as	smaller than

If the lamp was left switched on for 10 minutes, the amount of energy transformed would be _____ the amount of energy transformed in 2 minutes.

(1)

(Total 5 marks)

Q30.

Complete each of the following sentences, **A**, **B**, **C**, **D** and **E**, by choosing the correct ending from **K**, **L**, **M**, **N** or **O**.

The first one has been done for you.

A The current through a resistor depends _____ | O |

B A direct current _____ | |

C In a series circuit, the potential difference _____ | |

D An alternating current _____ | |

E In a parallel circuit, the potential difference _____ | |

K _____ across each component is the same.

L _____ is supplied by a cell or battery.

M _____ is constantly changing direction.

N _____ of the power supply is shared by the components.

O _____ on the potential difference across the resistor.

(Total 3 marks)

Q31.

An oscilloscope is connected to an alternating current (a.c.) supply.
The diagram shows the trace produced on the oscilloscope screen.

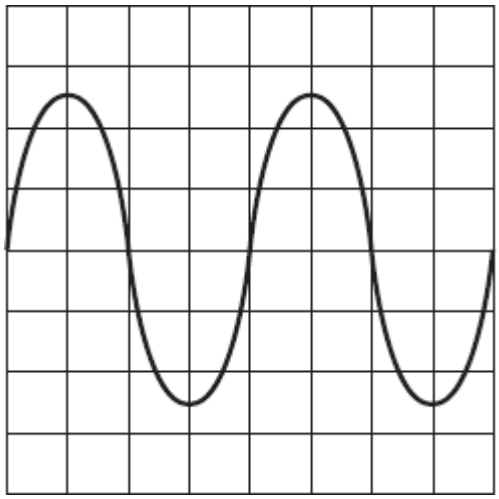

Each horizontal division on the oscilloscope screen represents 0.002 s.

(a) Calculate the frequency of the alternating current supply.

Show clearly how you work out your answer and give the unit.

_____

_____

_____

Frequency = _____

(3)

(b) What is the frequency of the a.c. mains electricity supply in the UK?

_____

(1)

(Total 4 marks)

Q32.

A homeowner has installed electric underfloor heating in the kitchen. When the heating is switched on, an electric current flows through wires running under the tiled floor surface.

(a) What is an electric current?

_____

(1)

(b) The graph shows how the power output of an underfloor heating system depends on the area of the floor that is heated.

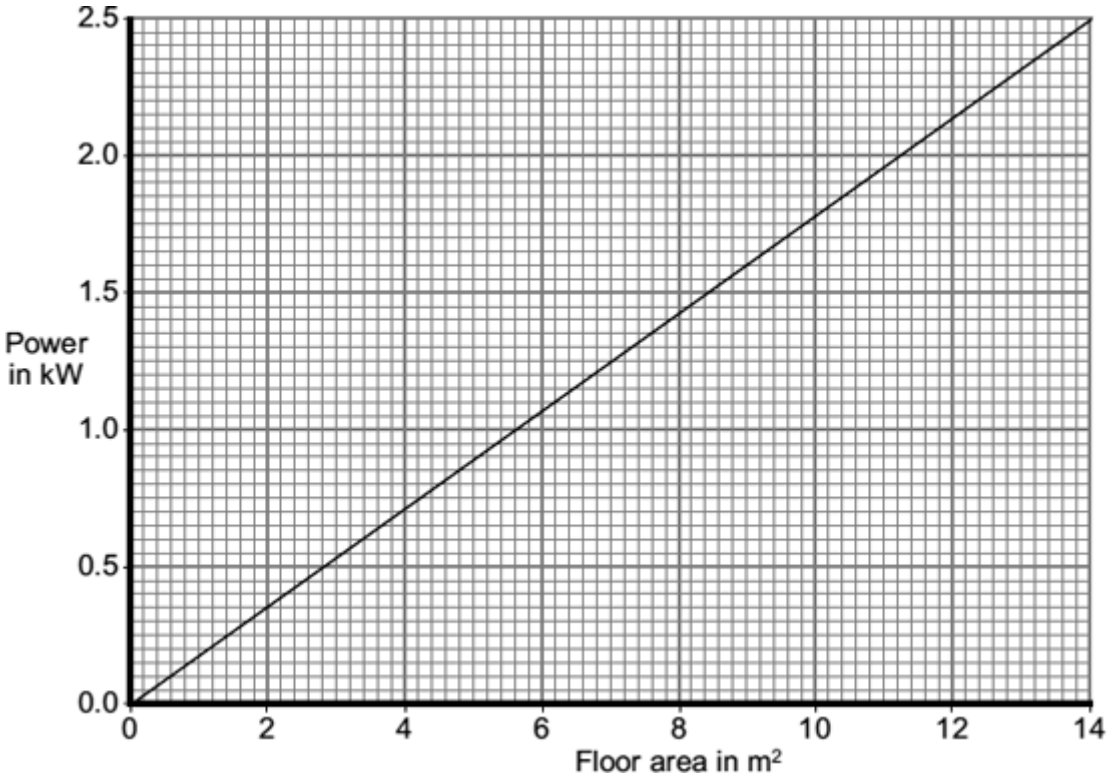

The area of the homeowner's kitchen floor is 9.0 m^2.

Calculate, using the graph, the current drawn from the 230 V mains supply by the heating system.

Show clearly how you work out your answer and give the unit.

_____

_____

_____

_____

Current = _____

(4)

(Total 5 marks)

Q33.

The pictures show three different types of electric heater.

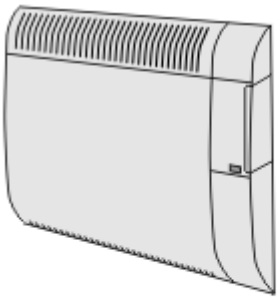

400W oil-filled panel heater (wall mounted)

- 3 heat settings
- Efficient background heat
- Safety overheat cut-out

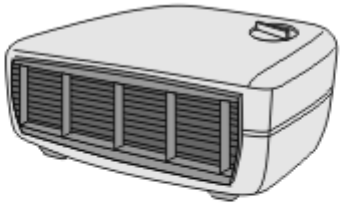

3kW fan heater

- 2 heat settings
- Power indicator light
- Cool air fan setting

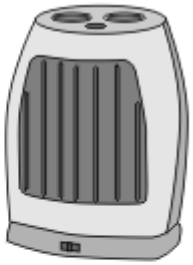

1800W ceramic heater

- 2 heat settings
- 8 hour timer
- Power indicator light
- Safety overheat cut-out

(a) The ceramic heater is run on full power for 5 hours.

Use the following equation to calculate, in joules, the amount of energy transferred from the mains to the heater.

energy transferred = power × time

Show clearly how you work out your answer.

_____

_____

Energy transferred = _____ joules

(2)

(b) Which heater will be the most expensive to run on its highest heat setting?

_____

(1)

(c) A heater is needed for a small office.

Comparing each type of heater with the other two, give **one** advantage of using each type of heater in the office.

oil-filled panel heater _____

_____

fan heater _____

_____

ceramic heater _____

_____

(3)

(Total 6 marks)

Q34.

(a) Use numbers given in the box to complete the following sentences.

12	**50**	**110**	**230**

In the UK, the mains electricity supply is _____ volts.

The frequency of the UK mains electricity supply is _____ hertz.

(2)

(b) The diagram shows a hairdryer designed to be used with the UK mains supply.

The cable connecting the hairdryer to the plug does not have an earth wire.

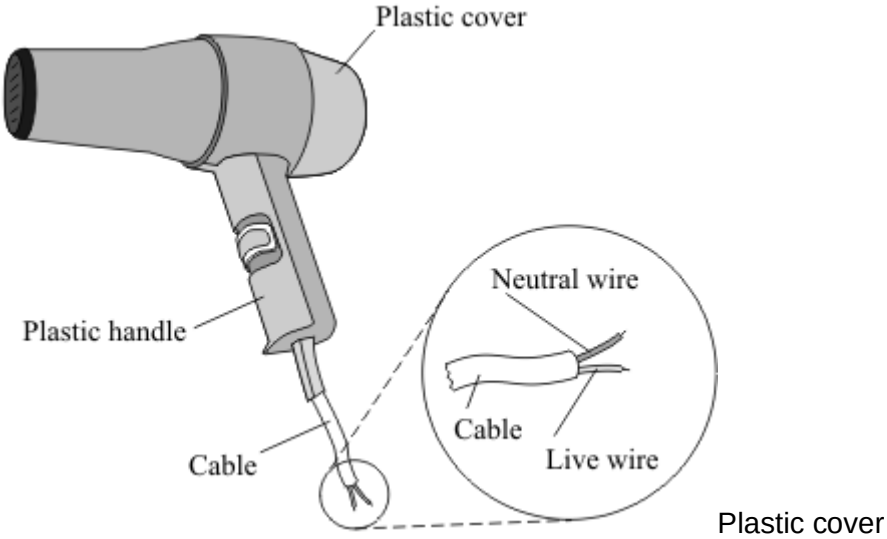

(i) Why does the hairdryer **not** need a cable with an earth wire?

_____

_____

(1)

(ii) Which **one** of the following materials are the two wires inside the cable made from?

Draw a ring around your answer.

aluminium **copper** **steel**

(1)

(Total 4 marks)

Q35.

(a) The diagram shows the circuit used by a student to measure the power of a filament lamp.

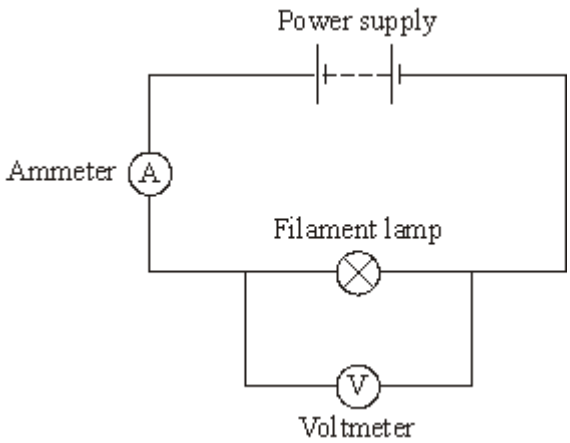

Name a component connected in parallel with the filament lamp.

_____

(1)

(b) By adding another component to the circuit, the student is able to obtain a range of ammeter and voltmeter readings.

Ammeter reading in amps	**Voltmeter reading in volts**
0.10	1.0
0.15	2.0
0.20	4.0
0.25	7.0
0.30	11.0

(i) Which **one** of the following components did the student add to the circuit?

Draw a ring around your answer.

fuse **switch** **variable resistor**

(1)

(ii) What is the range of ammeter readings taken by the student?

from _____ amps to _____ amps

(1)

(iii) Use the data in the table and the equation in the box to calculate the **maximum** power of the filament lamp.

$$\frac{\text{power}}{\text{(watt, W)}} = \frac{\text{current}}{\text{(ampere, A)}} \times \frac{\text{potential difference}}{\text{(volt, V)}}$$

Show clearly how you work out your answer.

_____

Power = _____ W

(3)

(c) Complete the following sentence by drawing a ring around the correct line in the box.

As the temperature of a filament lamp increases, its resistance

increases
remains constant
decreases

(1)

(Total 7 marks)

Mark schemes

Q1.

(a) **A**

*only scores if **A** chosen*

1

it is alternating / a.c.

accept because B and C are d.c.

or

it changes direction/p.d.

accept voltage for p.d.

it goes up and down is insufficient

it is constantly changing is insufficient

an answer B and/or C with the reason because it is direct current/d.c scores 1 mark

1

(b) too much current (through socket)

accept electricity for current

accept too much power

accept socket/circuit overloaded

do not accept voltage/p.d for current

1

wiring / socket gets hot

accept melts for gets hot

accept risk of fire

risk of fire in appliances is insufficient

ignore reference to sparking

overloaded plugs and plugs getting hot or fuses melting is insufficient

1

[4]

Q2.

(a) (i) 2

*allow **1** mark for correct substitution i.e. 0.8 × 2.5 provided no further step shown*

2

(ii) straight line drawn from origin to 2, 0.8

or

their (a)(i), 0.8

1

curve from 2, 0.8 to 12,2

or

their (a)(i) 0.8 to 12,2

accept curve from 2, 0.9 to 12,2

or

their (a)(i) 0.9 to 12,2

'convex' curve required
accept a curve that flattens between 10 and 12V

1

(iii) filament / lamp gets hot
accept temperature increases

1

(b) 108
*allow **1** mark for correct substitution i.e. 1.5 × 72 provided no further step shown*

2

[7]

Q3.

(a) fan

1

drill

1

washing machine
*four circled including correct three scores **1** mark*
five circled scores zero

1

(b) Appliances only transfer part of the energy usefully

1

The energy transferred by appliances makes the surroundings warmer

1

[5]

Q4.

(a) (i) A

1

(ii) bar drawn with correct height
ignore width of bar

1

(b) (i) $E = P \times t$

2.4
*allow **1** mark for correct substitution*
ie 1.2 × 2
provided no subsequent step shown

2

(ii) 36 or their (b)(i) × 15 correctly calculated

or

their (b)(i) × 0.15 correctly calculated with an answer given in £
*allow **1** mark for correct substitution*
ie 2.4 × 15

or
their (b)(i) × 15
*allow **1** mark for correct substitution*
provided no subsequent step shown
an answer £0.36 gains both marks

2

[6]

Q5.

(a) (i) 15

1

(ii) 4.5 or their (a)(i) x 0.3 correctly calculated

*allow **1** mark for correct substitution, ie 0.3 x 15/their (a)(i),*
provided no subsequent step

2

(ii) decrease

1

(b) **Y**

accept any correct indication

*reason only scores if **Y** is chosen*
accept voltage for p.d.

1

(only one that) shows a direct current / p.d.
or
a battery / cell gives a direct current

*accept both **X** and **Z** are a.c.*

or
a battery/cell gives a constant current/p.d.

accept it's a constant current/p.d.
it is not changing is insufficient

1

[6]

Q6.

(a) (i) correct symbol ringed

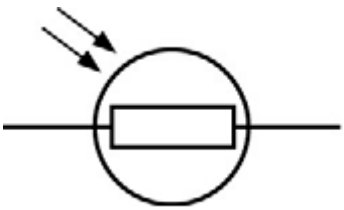

1

(ii) accept any suggestion that would change light intensity, eg:

- torch on or off

accept power of torch

*do **not** accept watts / wattage of torch*

- distance between torch and LDR
- lights in room on or off
- shadow over the LDR

1

(b) resistance decreases

1

from 600 kΩ to 200 kΩ

accept by 400 kΩ

1

(c) (i) no numbers for light intensity

or

light intensity is categoric / a description / not continuous

not enough results is insufficient

1

(ii) YES

mark is for the reason

both show that resistance increases with decreasing (light) intensity / brightness

accept they both get the same results / pattern

1

(d) A circuit that automatically switches outside lights on when it gets dark.

1

[7]

Q7.

(a) (i) earth wire

1

(ii) double

1

(b) if too much current flows through the wire

accept power for current

*do **not** accept electricity for current*

accept if more than 20 amps flows through the wire

1

the fuse (overheats and) melts

accept 'blows' for melts

do not accept explodes / breaks / snaps etc

1

breaking the circuit

accept stopping the current flow

1

[5]

Q8.

(a) electric current

(rate of) flow of (electric) charge / electrons

accept $I = \frac{Q}{t}$

with Q and t correctly named

1

potential difference

work done / energy transferred per coulomb of charge

(that passes between two points in a circuit)

accept $V = \frac{W}{Q}$

with W and Q correctly named

1

(b) metals contain free electrons (and ions)

accept mobile for free

1

as temperature of filament increases ions vibrate faster /

with a bigger amplitude

accept atoms for ions

accept ions/atoms gain energy

accept vibrate more for vibrate faster

do not accept start to vibrate

1

electrons collide more (frequently) with the ions

or

(drift) velocity of electrons decreases

do not accept start to collide

*accept increasing the p.d. increases the temperature (**1** mark)*

and

*(and) resistance increases with temperature (**1** mark) if no other marks scored*

1

(c) 7.8

*allow **1** mark for obtaining value 1.3 from graph*

***or** allow **1** mark for a correct calculation using an incorrect current in the range 1.2-1.6 inclusive*

2

[7]

Q9.

Fan C

1

Kettle B

1

Lamp D

1

Radio E

1

[4]

Q10.

(a) (i) 0.6
or
60%

*allow **1** mark for correct substitution ie* $\frac{720}{1200}$ *provided no subsequent step shown*

*an answer of 0.6 / 60 with a unit gains **1** mark only*

*an answer of 60 gains **1** mark only*

2

(ii) heat

allow thermal

1

(b) 12 000 p
or
£120

to score both marks the unit must be consistent with the numerical answer

*answers 12 000 and 120 gain **1** mark only*

*allow **1** mark for correct substitution ie 800 × 15 **or** 800 × 0.15*

provided no subsequent step shown

2

[5]

Q11.

(a) (i) 7.6

*allow **1** mark for correct substitution and / or transformation*

ie $0.95 = \frac{x}{8}$

95 × 8.0

2

(ii) 25 (hours)

*allow **1** mark for obtaining number of kWh = 200*

an answer of 26(.3) gains both marks

2

(b) any **two** from

- transferred to the surroundings / air / atmosphere
- becomes spread out
- shared between (many) molecules
- (wasted as) heat / sound

2

[6]

Q12.

(a) (i) 6

1

(ii) variable resistor

1

(iii) voltmeter

1

(b) (i) point at 3 V ringed

1

(ii) The student misread the ammeter.

1

(iii) 1 (volt)

accept every volt

1

(c) as one increases so does the other
or
directly proportional
or
positive correlation

accept a numerical description, eg when one doubles the other also doubles

1

[7]

Q13.

(a) (i) 720

*allow **1** mark for correct substitution,*
ie 72 × 10 provided no subsequent step shown

2

(ii) 720
or
their (a)(i)

1

(b) (i) gravitational potential

allow gravitational
allow potential

1

(ii) 432

*allow **1** mark for correct substitution, ie* $\frac{21600}{50}$ *provided no subsequent step shown*

2

watt / W

1

[7]

Q14.

(a) (i) circuit not complete

accept circuit is broken

accept switch / s are open / off

1

(ii) 9

*allow **1** mark for correct substitution, ie 0.5 × 18 provided no subsequent step shown*

2

(iii) 36

1

(b) can be switched on / off from top or bottom of stairs

1

(c) (i) (electric) shock

accept fitting becomes live

accept answers giving a possible consequence of electric shock, eg death

1

(ii) connect the <u>earth</u> wire

1

[7]

Q15.

(a) (i) also double

increases is insufficient

1

(ii) <u>variable</u> resistor

accept rheostat / potentiometer

1

(b) (i) the data / results / variables are continuous

accept data / results / variables are not categoric / discrete

1

(ii) misreading the ammeter

*do **not** accept misreading the meter / results*

*do **not** accept misreading the ammeter and / or voltmeter*

reading / human error is insufficient

1

(iii) straight line <u>from the origin</u> drawn passing close / through points at 1 V, 5 V, 6 V and ignoring anomalous point

*do **not** accept line drawn 'dot-to-dot'*

1

(iv) yes

mark is for the reason

supports prediction

or

(straight) line passes through the origin

accept a mathematical argument, eg when p.d. went from 2

to 4 the current went from 0.3 to 0.6
it's directly proportional is insufficient

1

[6]

Q16.

(a) (i) (connect) 30 (cells)

1

in series

1

(ii) current always flows in the same direction
or
current only flows one way

1

(iii) 36 000

*allow **1** mark for correctly converting 2 hours to 7200 seconds*
*answers 10 or 600 score **1** mark*

2

coulombs / C

*do **not** accept c*

1

(b) (i) 2160

*allow **1** mark for correct substitution, ie ½ × 120 × 6^2*
*answers of 1620 or 540 score **1** mark*

2

(ii) reduce it

1

any **one** from:

- draws a larger current (from battery)
- motor draws greater power (from battery)
  accept energy per second for power
  accept more energy needed to move the bicycle
- greater resistance force (to motion) / air resistance / drag / friction
  accept less streamlined
  more mass to carry is insufficient

1

[10]

Q17.

(a) (i) 4.5

1

(ii) 2.25 or their (a)(i) ÷ 2 correctly calculated

1

(iii) V_2

1

(b) (i) 30

1

(ii) 8

*allow **1** mark for correct substitution*
ie 0.4 × 20
*allow **1** mark for answers of 4 or 12*

2

(iii) **Y**

1

[7]

Q18.

(a) (i) **D**

1

(ii) plastic or rubber

accept a specific type of plastic
accept electrical insulator

1

(b) 460

*allow **1** mark for correct substitution ie 2 × 230*

2

(c) any **two** from:

- not all appliances need a 13 A fuse
  idea that 13 A is (much) bigger than required by many appliances
  *do **not** accept some appliances require more than 13 A*
  *do **not** accept 13 A fuse will blow*

- can choose the most suitable fuse (for the appliance)
  accept install correct fuse for the appliance

- (in the event of a fault) 13 A fuse may allow too much current to flow through an appliance
  or
  fuse may not melt (before appliance is damaged)

- may already have the fuse
  idea of reusing a fuse
  *do **not** accept cheaper unless explained correctly*

2

[6]

Q19.

(a) diode

accept LED

1

(b) all symbols correct

must include at least voltmeter and diode

1

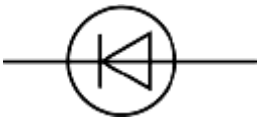

diode

allow ecf from part (a) if the component is not identified as a diode

allow symbol without the line through triangle

ignore polarity of diode

voltmeter in parallel with component added in series

*any additional components must not affect the ability to measure **V** and **I** for the diode / their (a)*

1

(c) (i) 0.05

accept 50 mA

accept between 0.048 and 0.050 inclusive

1

(ii) 16

$\frac{0.8}{\quad}$

their (c)(i) correctly calculated gains both marks

*allow **1** mark for correct transformation and substitution*

$\frac{0.8}{0.05}$ *or* $\frac{0.8}{\text{their (c)(i)}}$

allow 17 if using 0.048

2

[6]

Q20.

(a) (i) 0.25 (A)

1

(ii) 75

*allow **1** mark for converting 5 minutes to 300 seconds*

***or** allow **1** mark for correct substitution*

ie 0.25 × 300

*allow **1** mark for an answer 1.25*

*allow **1** mark only for their (a)(i) × 300 correctly calculated*

2

coulombs or C

*do **not** accept c*

1

(b) any **two** from:

- fault not repaired

  accept if a fault was to occur

- larger current will (still) flow

- aluminium foil will not melt (if a fault)
  accept aluminium foil needs a higher current / charge to melt

- wiring will overheat / (may) cause a fire
  accept idea of fire hazard
  *do **not** accept explode etc*

2

[6]

Q21.

(a) radio
radio must be chosen for reason to score

1

gives out sound
inclusion of other forms of energy negates mark
or
others give out heat / thermal energy

1

(b) Kettle
accept 2.5 (kW)

1

(c) 60 (p)
accept £0.6(0)
*allow **1** mark for correct substitution ie 4 × 15*
substitution only scores if no subsequent step shown
*£60 scores **1** mark*

2

(d) (bigger volume) takes more time (to boil)
accept explanation using data from graph

1

(so) more energy transferred
*do **not** accept electricity for energy*

1

(and) this costs more money
ignore references to cost of water

1

[8]

Q22.

(a) brown

1

(b) outside / case is plastic / an insulator
accept is double insulated
accept non-conductor for plastic
*do **not** accept it / hairdryer is plastic*

1

(c) (i) (1) S_1

and no other

1

(2) S_1 and S_3

both required, either order

1

(ii) S_1 must be ON (for either heater to work)

*do **not** accept reference to 'fan' switch*

1

S_1 switches the fan on

1

(d) 1495

*allow **1** mark for correct substitution*

ie, 6.5 × 230

2

watt(s) or W

*an answer of 1.495 kW gains **3** marks*

although the unit is an independent mark for full credit

the unit and numerical value must be consistent

accept joules per second or J/s

1

[9]

Q23.

(a) (i) ammeter and battery **in series** with the **gauge**

symbols must be correct

ignore a voltmeter drawn in series

accept

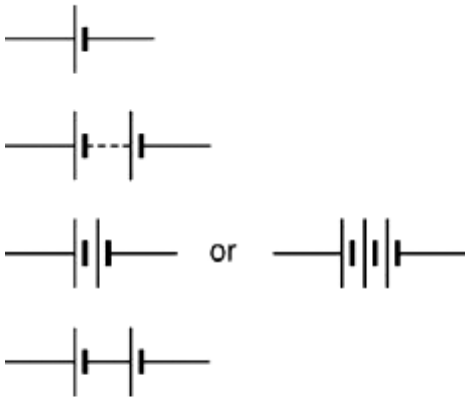

not

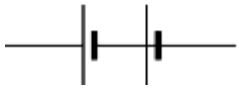

or cells reversed to cancel out

1

voltmeter in parallel with the gauge

symbol must be correct

accept a freestanding circuit

diagram provided strain gauge is labelled or a resistor symbol used for the strain gauge

1

(ii) d.c. flows only in one direction

a.c. changes direction is insufficient

1

(b) (i) 75

this answer only

*allow **1** mark for correct substitution **and** transformation,*

ie resistance = $\frac{3.0}{0.040}$

2

(ii) increases

1

(iii) elastic / strain <u>potential</u>

*do **not** accept potential*

1

[7]

Q24.

(a) transferred to surroundings / surrounding molecules / atmosphere

'it escapes' is insufficient

or

becomes dissipated / spread out

accept warms the surroundings

accept degraded / diluted

accept a correct description for

surroundings eg to the washing machine

*do **not** accept transformed into heat on its own*

1

(b) a smaller <u>proportion / percentage</u> of the energy supplied is wasted

owtte

*accept a statement such as 'less energy is wasted' for **1** mark*

*do **not** accept costs less to run*

ignore references to uses less energy

2

(c) (i) 2.4 (p)

accept 2 p if it is clear from the working out this is rounded from 2.4 p

*allow **1** mark for correct substitution of correct values*

ie 0.2 × 12

*allow **1** mark for calculating cost at 40 °C (13.2 p)*

or

cost at 30 °C (10.8 p)

2

(ii) any **one** from:

- less electricity needed
  ignore answers in terms of the washing machine releasing less energy
  an answer in terms of the washing machine releasing CO_2 negates the mark
  *do **not** accept less energy is produced*

- fewer power stations needed

- less fuel is burned
  accept a correctly named fuel
  *do **not** accept less fuel is needed*

1

[6]

Q25.

(a) switch

allow answer circled in box

1

(b) 24

1

(c) equal to 0.25 A

1

(d) 4

1

[4]

Q26.

(a) a light-dependent resistor

1

(b) any **three** from:

- resistance starts at 500 (kilohms)

- (resistance) falls rapidly as intensity increases from 0
  accept resistance falls
  accept brightness for intensity

- (resistance) halves between 10 and 20 lux

- (resistance) falls slightly between 20 and 50 lux
  or
- (resistance) almost constant / levels out between 20 and 50 lux

- at 50 lux, resistance = 10 (kilohms)
  for full credit the word resistance must be used correctly at least once
  *an answer resistance falls as intensity increases gains **2** marks - this may be combined with one of the bullet point marks for full credit*

3

(c) (i) decrease

1

(ii) resistance increases

this can score without (c)(i)

1

(d) A circuit to switch on security lighting when it gets dark.

1

[7]

Q27.

(a) (i) light dependent resistor / LDR

accept ldr

1

(ii) 25 (kilohms)

accept 24 - 26 inclusive

accept 25 000 Ω

1

(iii) 5 (V) or their (a)(ii) correctly converted to ohms × 0.0002 correctly calculated

*allow **1** mark for converting 25 kΩ /*

their (a)(ii) to ohms

or

*allow **1** mark for correct substitution*

ie 0.0002 × 25(000)

***or** 0.0002 × their (a)(ii)*

allow an incorrect conversion from kilohms providing this is clearly shown

2

(b) (i) linear scale

using all of the available axis

must cover the range 4 - 6 v

***or** their (a)(iii) - 6 v and lie within the range 0 - 15 inc.*

1

(ii) negative gradient line

*do **not** allow lines with both positive and negative gradients*

1

passing through 20 lux and their (a)(iii)

only scores if the first mark is awarded

only scores if line does not go above 6 volts

1

(c) (i) 37.5 (kΩ) or their (a)(ii) + 50 % (a)(ii) correctly calculated

1

(ii) light intensity value would be unreliable / not accurate

1

due to variation in <u>resistance</u> value

accept because resistance varies by ± 50 %

accept tolerance of resistor is too great

*do **not** accept results are not accurate*

1

[10]

Q28.

(a) (i) 2(.0)

accept 2000 W or 2000 watt(s)
accept answer given in table
*do **not** accept 2000*

1

(ii) 4.5

*allow **1** mark for correct substitution*
ie 1.5 × 3
*allow **1** mark for the answers 1.5 or 6(.0)*

2

(iii) 54
or
their (a)(ii) × 12 correctly calculated

*allow **1** mark for correct substitution*
ie 4.5 × 12
or
their (a)(ii) × 12
*allow **1** mark if correct answer is given in pounds eg £54*

2

(b) (i) 6 pm

1

temperature starts to rise faster

only scores if 6 pm given

or
graph (line) is steeper / steepest

it refers to graph gradient or temperature
accept answers in terms of relative temperature rise
eg 5 to 6 pm 2 °C rise, 6 to 7 pm 6 °C rise
accept temperature rises sharply / rapidly / quickly
*do **not** accept temperature starts to rise*

1

(ii) middle box ticked

1

[8]

Q29.

(a)

accept 'the humpback bridge' symbol
accept circle with cross but no lines
if more than one symbol drawn, no mark unless lamp is labelled

1

(b) (i) 24

*allow **1** mark for correct substitution ie* $\frac{2800}{120}$
*allow **1** mark for an answer 1440*
ignore any unit

2

(ii) watt

1

(c) larger than

accept correct indication inside the box
accept an answer meaning larger than ie greater than

1

[5]

Q30.

L

N

M

K

all four in the correct order
***2** marks for 2 correct*
***1** mark for 1 correct*

[3]

Q31.

(a) 125

*allow **1** mark for obtaining time period = 0.008 (s)*
or
frequency = 1 / time period (or their calculated time period)

2

hertz
or
Hz

*do **not** accept hz*

1

(b) 50 (hertz)

1

[4]

Q32.

(a) (rate of) <u>flow</u> of charge / electrons / ions

accept movement for flow
*do **not** accept flow of electricity*

1

(b) 7(.0)

accept 6.96 / 6.95 or an answer that would approximate to 6.96 if rounded

*allow **1** mark for obtaining correct power and changing to watts ie 1600*

or

*allow **2** marks for correct substitution and transformation ie 1600 ÷ 230*

*an answer 0.00696 / 0.007 gains **2** marks*

*allow **1** mark for 1.6 / 230 or 1.7 / 230*

*an answer 7.39 or 7.4 gains **2** marks*

3

amp (ere)

accept A

1

[5]

Q33.

(a) 32,400,00 J

*allow **1** mark for correct substitution*
3.24×10^{7} J

2

(b) (3kW) fan heater

accept 3kW
accept the middle one

1

(c)

features common to more than one heater, treat as neutral

<u>oil-filled</u>

low level heat

cannot be knocked over / space saving / no trailing wires

*do **not** accept just wall-mounted*

or more control over heat output

*do **not** accept just 3 heat settings*

1

<u>fan</u>

warms (office) rapidly **or** can be used to cool air (in summer)

accept can be used as a fan
accept cool air fan (setting)
accept 'it has a cool air setting in case it gets too hot'
*do **not** accept a specific reference to cooling the heater*

1

<u>ceramic</u>

can be switched on for set periods of time

*do **not** accept just has a timer*

or can be switched on before office is used / switched off automatically at night

1

[6]

Q34.

(a) 230

1

50

1

(b) (i) has a plastic case

accept outside is plastic
accept cover / handle/ hair dryer is plastic / non-conductor

or does not have a metal case **or** plastic is an insulator

accept is double insulated

1

(ii) copper

1

[4]

Q35.

(a) voltmeter

and no other
*do **not** accept voltage*

1

(b) (i) variable resistor

1

(ii) 0.10 – 0.30

accept 0.1 – 0.3
accept 0.3 – 0.1
accept 0.30 – 0.10

1

(iii) 3.3 (W)

*allow **1** mark for correct data choice*
*allow **2** marks for substitution of correct data i.e. 0.30 × 11.0*
*the following answers gain **2** marks*
0.10 / 0.30 / 0.80 / 1.75
*allow **1** mark for substitution of incorrect of data incorrectly calculated e.g.*
*0.20 × 4.0 = 0.6 scores **1** mark*

3

(c) increases

1

[7]